2370 FM 1979, San Marcos, TX 78666 830-372-1031

RULES AND REGULATIONS

Rules and Regulations

CERTIFICATES OF CONVENIENCE AND NECESSITY NO. 0940015 and 21086

HAYS, GUADALUPE, COMAL and CALDWELL COUNTIES, TEXAS

Amended August 23, 2018

Effective Date October 1, 2018

Table of Contents

SECTION A: ADOPTION & AUTHORITY

1 **Effective Date.** These Rules and Regulations were originally adopted by the Board of Directors of the Crystal Clear Special Utility district on June 23, 2015, pursuant to Tex. S.B. 1116, 83rd Leg., R.S. (2013). These Rules and Regulations, as amended from time to time, supersedes all utility service policies, rates, rules and tariffs adopted or passed by the Board of Directors prior to the date of adoption of these Rules and Regulations. These Rules and Regulations shall take effect immediately upon approval.

2 **Pre-Existing Tariff.** The District adopted these Rules and Regulations to replace and supersede the tariff that was in effective prior to, and carried forward after, the conversion of Crystal Clear Water Supply Corporation to Crystal Clear Special Utility District prior to the effective date of the adoption of these rules and Regulations.

3 **Pre-Existing Penalties and Vested Rights.** The adoption of these Rules and Regulations shall not affect any offense or act committed or done, or any penalty or forfeiture incurred, or any contract or vested right established or accrued prior to the effective date or adoption of these Rules and Regulations.

4 **Official Copy Available.** An official copy of the Rules and Regulations shall be available to the customers of the District during regular office hours of the District. Requests for copies shall be subject to reproduction charges. The reproduction charge shall be $20.00. The Business Manager of the District shall maintain the original copy as approved, and clearly exhibit all additions, deletions and amendments hereto.

5 **Conflicts.** Rules and regulations of state and federal agencies having applicable jurisdiction, promulgated under any applicable state or federal law, shall supersede all terms of the Rules and Regulations that directly conflict with such State and Federal rules or regulations. If any section, paragraph, sentence, clause, phrase, word or words of these Rules and Regulations are declared unconstitutional or in violation of law, the remainder of the Rules and Regulations shall not be affected thereby and shall remain in full force and effect.

_____	_____
President	Secretary
_____	_____
Signature	Signature
_____	_____
Date	Date

SECTION B: STATEMENTS

1. **Organization.** The District was created pursuant to TEX. S.B. 1116, 83rd Leg., R.S. (2013), further codified in TEX. SPEC. DIST. LOC. LAWS CODE Chapter 7206, enacted under the authority granted to the Texas Legislature in TEX. CONST. art. XVI, § 59. The District exists for the purpose of furnishing potable water and wastewater utility service. The District was organized on January 18, 2013, following the confirmation election by the voters within the geographic area as specified by Senate Bill 1116. The District is managed by the Board of Directors, the members of which are elected by qualified voters residing within the District's boundaries.

2. **Non-Discrimination Policy**. Service is provided to all applicants that comply with the provisions of these Rules and Regulations regardless of race, creed, color, national origin, sex, disability or marital status.

3. **Policy and Rule Application.** These policies, rules and regulations apply to the water and wastewater services provided by the District. Failure on the part of a customer or applicant to observe these policies, rules and regulations gives the District the authority to deny or discontinue service.

4. **Fire Protection.** It is not a primary responsibility of the District to provide "fire flows" from the District's water system. As the District's system grows from a rural system to an urban system, the District's facilities will accommodate "fire-flows" as required by municipal or County regulations for future developments or projects. All hydrants or flush valves are for the operation and maintenance of the system and may be used for refill only by authorized fire departments. The District reserves the right to remove any hydrant due to improper use or detriment to its water system, as determined by the District, at any time without notice, refund or compensation to the contributors unless such hydrants are installed pursuant to the terms of a Non-Standard Service Contract, in which event the terms and conditions of the contract shall apply.

5. **Damage Liability.** Pursuant to State Law, the District is not liable for damages caused by service interruptions due to waterline breaks or equipment failure, tampering by third persons or customers of the District, normal system failures, system maintenance or repairs, or other events beyond the District's control, or for damages caused by negligent acts of the District, its employees, designated representatives and contractors.

6. **Public Information Disclosure.** The records of the District shall be kept at the District's office at 2370 FM 1979, San Marcos, Texas 78666. All information collected, assembled or maintained by or for the District shall be disclosed to the public in accordance with the Texas Public Information Act. An individual customer may request in writing that the District keep the customer's name, address, telephone number or social security number confidential. Such confidentiality does not prohibit the District from disclosing this information to an official or employee of the state or a political subdivision of the state acting in an official capacity or an employee of the District acting in connection with the employee's duties. A reasonable charge as established pursuant to the Texas Public Information Act may be assessed to any person requesting copies of District records.

7. **Notice of Change in Rates.** The District will give written notice of a change to monthly rates by publication or mail to all affected customers at least thirty (30) days prior to the effective date of the new rate. The notice shall contain the old rates, new rates, effective date of the new rates, date of Board authorization, and the name and telephone number of the District representative designated to address inquiries about the rate change. Failure of the District to give the notice shall not invalidate the changed rate or any change based on the changed rate.

8. **Customer Service Inspections.** The District requires that a customer service inspection certificate from a licensed inspector, assigned by the District, be completed prior to providing water service to completed new construction and for all new customers as part of the activation of standard and some non-standard service. Customer service inspections are also required on any existing service when the District has reason to believe that cross-connections or other potential contaminant hazards exist, or after any material improvement, correction or addition to the customers' water distribution facilities. This inspection is limited to the identification and prevention of cross connections, potential contaminant hazards and illegal lead materials. [30 TAC § 290.46(I-j)].

9. **Public Works Standards.** The District adopts applicable sections of the most current edition of the Standard Specifications for Public Works Construction, as amended as guidance in the design, installation and maintenance of line extensions and service facilities. In addition to the aforementioned guidance document, all work will be designed, installed, and maintained in accordance with the TCEQ regulations, local and State standards and applicable plumbing codes in effect at the time work is performed.

10. **Sub metering Responsibility**. Sub metering and non-sub metering by Master Metered Accounts may be allowed in the District's water/wastewater system provided the Master Metered Account customer registers with the Texas Commission on Environmental Quality and complies with its rules on sub metering at Title 30, Chapter 291, Subchapter H of the Texas Administrative Code. The District has no jurisdiction over or responsibility to tenants receiving water under a Master Metered Account, and such tenants are not considered customers of the District. Any interruption or impairment of water service to the tenants is the responsibility of the Master Metered Account customer. Any complaints regarding sub metering should be directed to the Texas Commission on Environmental Quality.

11. **District Forms Policy.** The sample forms in Appendices A and B of these Rules and Regulations are the same or similar in form to those used by the District and are attached hereto for informational purposes only. The District reserves the right to amend, revise and discontinue use of any of the attached forms, and to create and use new forms, at its sole discretion, for purposes that include, without limitation, complying with federal and state laws and regulations, improving District administrative efficiency, providing better service to customers, fulfilling the unique and facilities needs of sub-dividers, developers and nonstandard service applicants, and meeting the future system demands of the District.

12. **Threats to Utility Personnel or Property.** Threats to utility personnel or other actions which prevent the lawful conduct of utility business on utility property, easements or right of entry shall result in immediate discontinuance of utility service until the condition is corrected or the threat is permanently removed. Threats to or assaults upon utility personnel shall result in criminal prosecution.

SECTION C: DEFINITIONS

The following words and terms, when used in these rules and Regulations, shall have the following meanings unless the context clearly indicates otherwise:

Applicant — A person applying to the District for service.

Board of Directors (or) **Board** — The governing body of the District elected by qualified voters residing within the District's boundaries in accordance with applicable election laws.

Certificate of Convenience and Necessity (or) **CCN** — The authorization granted under Chapter 13, Subchapter G, of the Texas Water Code for the District to provide water and/or wastewater service within a defined territory. The District has been issued Certificate Nos. 10297 and 21086 to provide water and wastewater service.

Certificated service areas (or) service areas — see Section D, Certificated Service Area Maps.

Customer — Any person receiving services from the District.

Designated representative (or) **district representative** — The General Manager of the District or a representative or employee of the District engaged in carrying out the terms of or performing services prescribed by these rules and Regulations pursuant to either general or specific authorization to do so from the General Manager or the Board of Directors.

Developer — Any person that subdivides land, requests two (2) or more water or wastewater service connections on a single contiguous tract of land or who is developing a non-residential project that has a water demand that cannot be served through a standard 5/8 or 3/4 water meter. [*See* Texas Water Code § 13.2502(e) (1)].

Disconnection of service — The discontinuance of water or wastewater service to a customer of the District.

District — The Crystal Clear Special Utility District.

Easement — A private perpetual dedicated right-of-way for the installation of water and/or wastewater service lines and facilities that allows access to property for future operation, maintenance, replacement, facility upgrades, and/or installation of additional pipelines (if applicable), and may include restrictions on the adjacent area to limit installation of other pipelines or structures that would restrict the District's use of any area of the easement.

Final plat — A complete and exact plan for the subdivision and/or development of a tract of land which has been approved by all local governments having jurisdiction pursuant to Chapters 212 or 232 of the Texas Local Government Code. The District shall determine if a plat submitted under these rules and Regulations qualifies as a final plat. [*See* 30 TAC § 291.85].

General Manager — The General Manager of the District appointed by the Board of Directors.

Hazardous condition -A condition that jeopardizes the, safety, health and/or welfare of District customers or employees as determined by the District or any other regulatory authority with jurisdiction.

Low Pressure Wastewater System (or) **LPWS** — The wastewater collection system installed by or on behalf of the District.

Non-Payment Fee – A fee assessed when a customer's account is in default for non-payment in full by the 7:00 a.m. CST deadline on Disconnect Day.

Person — Any natural person, firm, corporation, cooperative, limited liability company, partnership, unincorporated association, public agency or governmental entity, or any other public or private organization or entity of any type or character.

Proof of Ownership—Texas Water Code 67.016(d) gives authority to the District to require ownership of real estate designated to receive service as a condition of becoming a customer and receiving service. For the purpose of these rules and regulations, applicants for service shall provide proof of ownership by deed of trust, warranty deed, or other recordable documentation of fee simple title to real estate to be served. Renters may receive service only through owner of the property to be served.

Public Utility Commission of Texas (PUC) -— The state regulatory agency that generally regulates water and sewer utilities' rates, and CCN matters.

Re-Service — Providing service to an applicant at a location at which service previously existed and at which there is an existing facilities for a meter. Costs of such re-servicing shall be as established in these rules and Regulations or based on justifiable expenses in connection with such re-servicing.

Septic Tank Effluent Pumping Unit (STEP Unit) — The individual facility located at each building or residence which is owned, and maintained by the District as part of the District's Low Pressure Wastewater System. The STEP Unit includes a pump, treatment/tank, controls, control panel, valves, piping, electric wiring and related facilities.

Service — Any act performed, anything furnished or supplied, and any facilities used by the District in the performance of its duties under the Texas Water Code, the Texas Administrative Code, or applicable municipal ordinance or Commissioner's Court Order to its customers, employees, other retail public utilities, and the public, as well as the interchange of facilities between the District and one or more retail public utilities.

Service application and agreement (or) **service agreement** — A written agreement on the current service application and agreement form between an applicant and the District defining the specific type of service requirements requested, and the responsibilities of each party regarding the service to be provided.

Service classification/unit — The type of water service required by an applicant as may be determined by the District based on specific criteria such as usage, meter size, demand, type of application, and other relevant factors related to the applicant's request. The base service unit

of residential water service used by the District in facilities design and rate making in these rules and Regulations is a 5/8" x 3/4" water meter.

Service Investigation Fee (Residential) — a non-refundable fee of $50.00 for residential units for one (1) meter, paid to the District at the time of filing the standard service application for the purpose of determining the feasibility and capability of the system of providing service to the location of the applicant's residential unit. This fee covers administrative, legal fees and engineering expenses incurred by the District at the time of application. After review of the application, the Engineer will provide an estimate of the cost of their Engineering Study. The customer will be notified of any additional fees to be paid before the application/investigation will be finalized.

Service Investigation Fee (Commercial, Industrial and Developers) — A non-refundable fee in the amount of $50.00 for developments up to 250 meters or meter equivalent, paid to the District at the time of filing a nonstandard service application for the purpose of determining the feasibility of providing service to a proposed project. This fee covers administrative, legal fees engineering expenses incurred by the District at the time of application. After review of the application, the Engineer will provide an estimate of the cost of their Engineering Study. The customer will be notified of any additional fees to be paid before the application/investigation will be finalized.

Subdivide — To divide the surface area of land into lots or tracts of land. [*See* Local Gov't Code § 232.021(11)].

Subdivision — An area of land that has been subdivided into lots or tracts. [*See* Local Gov't Code § 232.021(13)].

Temporary service — The classification for water service assigned to any applicant that is in the process of constructing a residential or commercial structure. The District may also apply this classification to other nonpermanent service uses (e.g., agricultural, road construction, drilling, livestock, etc.). The District may provide temporary water service for up to six (6) months from the date of application for temporary service. Temporary service may be extended upon request and approval of the District on a case-by-case basis. As a prerequisite to receiving temporary service, the applicant must pay the applicable Temporary Service Charges, pursuant to Section G of these Rules and Regulations.

Texas Commission on Environmental Quality (**TCEQ)** — The State regulatory agency having jurisdiction of water and wastewater service utilities and appellate jurisdiction over the regulations regarding the health and safety of operating water and wastewater services in the state.

Wastewater System -The wastewater collection, disposal and treatment facilities operated by or constructed by or for the District, and any wastewater system extensions, improvements or facilities that may be built within the District's boundaries or service area in the future.

Water system -The water production, treatment, supply, storage and distribution facilities operated by or constructed by or for the District, and any water system extensions,

improvements or facilities that may be built within the District’s boundaries or service area in the future.

SECTION D: GEOGRAPHIC AREA SERVED
CERTIFICATE OF CONVENIENCE AND NECESSITY

To Provide Water Service Pursuant to the Texas Water Code, the Public Utility Commission of Texas, and/or the Texas Commission on Environmental Quality Rules

Certificate No. 10297

1. Certificate Holder

   Name: Crystal Clear Special Utility District
   Address: 2370 FM 1979
   San Marcos, TX 78666

2. General Description and Location of Service Area:

   Comal County, Guadalupe County, Hays County and Caldwell County

3. Certificated Service Area Maps:

   The certificate holder is authorized to provide water service in the area identified on the Public Utility Commission of Texas' official service area map maintained in the offices of the Public Utility Commission of Texas, William B. Travis Bldg., 1701 N. Congress Avenue, 7th Floor, Austin, TX 78701.

This certificate, as amended from time to time, has been issued pursuant to applications of the District and is subject to the rules and orders of the TCEQ, the laws of the State of Texas and conditions contained in the certificate. The certificate is valid until amended or revoked by the TCEQ.

The following two (2) pages contain a copy of Certificate No. 10297 and a map of the District's water service area.

Public Utility Commission of Texas

By These Presents Be It Known To All That

CRYSTAL CLEAR WATER SUPPLY CORPORATION

having duly applied for certification to provide water utility service for the convenience and necessity of the public, and it having been determined by this Commission that the public convenience and necessity would in fact be advanced by the provision of such service by this Applicant, is entitled to and is hereby granted this

Certificate of Convenience and Necessity

numbered 10297 , to provide water utility service to that service area or those service areas designated by final Order or Orders duly entered by this Commission, which Order or Orders are on file at the Commission offices in Austin, Texas; and are matters of official record available for public inspection; and be it known further that these presents do evidence the authority and the duty of this Grantee to provide such utility service in accordance with the laws of this State and the Rules of this Commission, subject only to any power and responsibility of this Commission to revoke or amend this Certificate in whole or in part upon a subsequent showing that the public convenience and necessity would be better served thereby.

Issued at Austin, Texas, this 1st day of November, 1979.

Philip F. Ricketts
SECRETARY OF THE COMMISSION

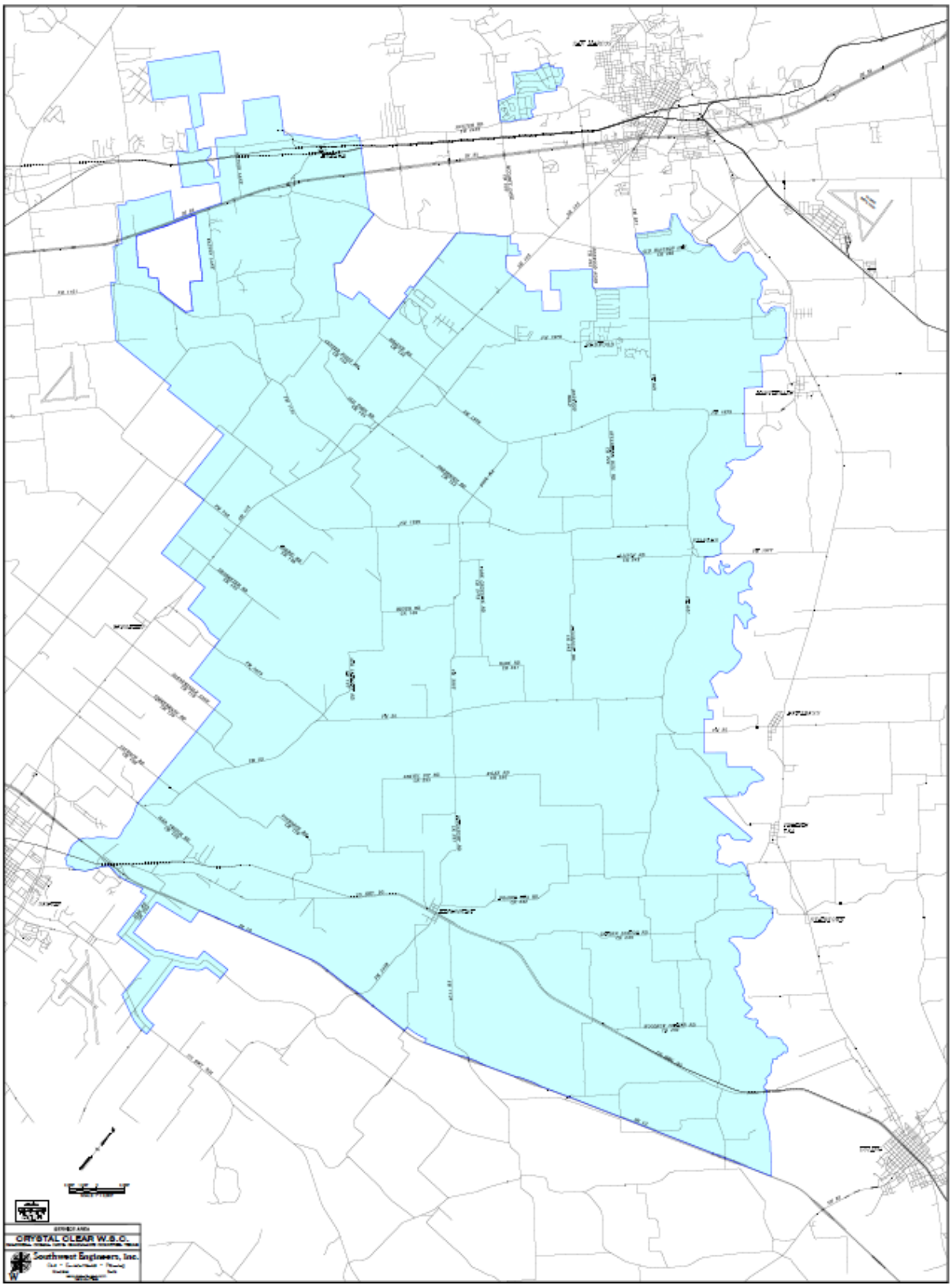
CRYSTAL CLEAR W.S.C.
Southwest Engineers, Inc.

SECTION D.1: GEOGRAPHIC AREA SERVED
CERTIFICATE OF CONVENIENCE AND NECESSITY FOR WASTEWATER

To Provide Water Service Pursuant to the Texas Water Code, the Public Utility Commission of Texas, and the Texas Commission on Environmental Quality Rules

Certificate No. 21086

1. Certificate Holder

   Name: Crystal Clear Special Utility District
   Address: 2370 FM 1979
   San Marcos, TX 78666

2. General Description and Location of Service Area:

   Comal County

3. Certificated Service Area Maps:

   The certificate holder is authorized to provide wastewater service in the area identified on the Public Utility Commission of Texas' official service area map maintained in the offices of the Public Utility Commission of Texas, William B. Travis Bldg., 1701 N. Congress Avenue, 7th Floor, Austin, TX 78701.

This certificate, as amended from time to time, has been issued pursuant to applications of the District and is subject to the rules and orders of the TCEQ, the laws of the State of Texas and conditions contained in the certificate. The certificate is valid until amended or revoked by the TCEQ.

The following two (2) pages contain a copy of Certificate No. 21086 and a map of the District's water service area.

S
C

201606011918 03/22/2016 03:07:47 PM 1/5

Public Utility Commission

Of Texas

By These Presents Be It Known To All That

CRYSTAL CLEAR WSC

having duly applied for certification to provide sewer utility service for the convenience and necessity of the public, and it having been determined by this Commission that the public convenience and necessity would in fact be advanced by the provision of such service by this Applicant, is entitled to and is hereby granted this

Certificate of Convenience and Necessity No. 21086

to provide continuous and adequate sewer utility service to that service area or those service areas in Comal County as by final Order or Orders duly entered by this Commission, which Order or Orders resulting from Docket No. 44695 are on file at the Commission offices in Austin, Texas; and are matters of official record available for public inspection; and be it known further that these presents do evidence the authority and the duty of the Crystal Clear WSC to provide such utility service in accordance with the laws of this State and Rules of this Commission, subject only to any power and responsibility of this Commission to revoke or amend this Certificate in whole or in part upon a subsequent showing that the public convenience and necessity would be better served thereby.

Issued at Austin, Texas, this 12th day of February 2016.

CERTIFIED TO BE A TRUE AND CORRECT
COPY OF THE ORIGINAL ON FILE WITH THE
PUBLIC UTILITY COMMISSION OF TEXAS
CENTRAL RECORDS DIVISION

BY: Rosie Medina

DATE: 3-10-16

Crystal Clear WSC
Sewer Service Area
CCN No. 21086
PUC Docket No. 44695
Obtained New CCN in Comal County

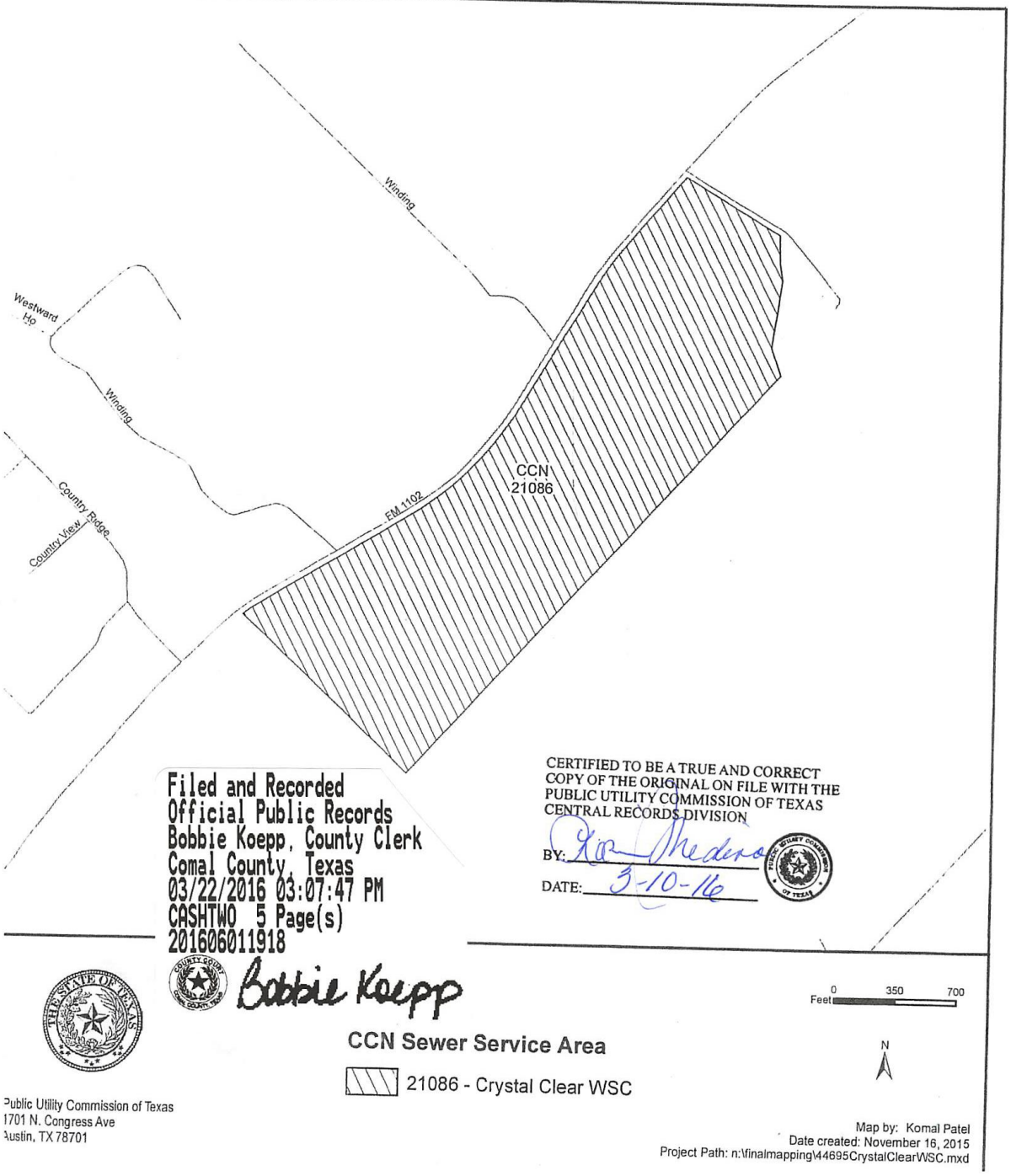

Filed and Recorded
Official Public Records
Bobbie Koepp, County Clerk
Comal County, Texas
03/22/2016 03:07:47 PM
CASHTWO 5 Page(s)
201606011918

Bobbie Koepp

CERTIFIED TO BE A TRUE AND CORRECT COPY OF THE ORIGINAL ON FILE WITH THE PUBLIC UTILITY COMMISSION OF TEXAS CENTRAL RECORDS DIVISION

BY: Ron Medina

DATE: 3-10-16

Public Utility Commission of Texas
1701 N. Congress Ave
Austin, TX 78701

Map by: Komal Patel
Date created: November 16, 2015
Project Path: n:\finalmapping\44695CrystalClearWSC.mxd

SECTION E: SERVICE RULES AND REGULATIONS

1. Service Entitlement

An applicant requesting service to real property located within the District's service area shall be considered qualified and entitled to water and/or wastewater service when a proper application has been filed with the District, the terms and conditions of service have been met and continue to be met, and all fees have been paid as prescribed. An applicant requesting service to real property located outside the boundaries of the District's service area and/or political boundaries may be considered for service in accordance with current District policies on providing service outside the District's service area.

2. Application Procedures and Requirements

(A) Service Classifications. Applications to the District for service shall be divided into the following two (2) classes:

(1) Standard Service. Standard service is defined as service from an existing service line where line or service facility extensions are not required and special design and/or engineering considerations are not necessary in the District's discretion. Standard water service is provided through a 5/8" x 3/4" meter set on an existing water line. Standard wastewater service is provided via minimum 1.1/4" wastewater tap connected to Low Pressure Force Main collection lines three (3) feet in depth in a properly bedded trench.

(2) Non-Standard Service. Non-standard water service is defined as any service request that requires a larger than 5/8 " x 3/4" meter for service, temporary water service, service to a Master Metered Account pursuant to Section E.2(c)(4) below, or an addition to or extension of the District's water system or wastewater system. Except for temporary service applicants, a non-standard service applicant must comply with the service requirements prescribed by Section F of these Rules and Regulations prior to receiving service.

(B) Requirements for Mandatory Wastewater Connection.

(1) Effective June 23, 2015, the Board of Directors adopted the following requirements for mandatory wastewater connections:

(a) The installation of any private on-site wastewater treatment or holding facility on land within the District's certificated service area and less than three hundred feet (300') from the nearest wastewater collection point of the District's wastewater system (measured from boundary line of the land along public right-of-ways or utility easements) may be prohibited and the District may provide wastewater service to any such property.

(b) All new developments and subdivisions on land within the District's certificated service area shall be required to connect to the District's wastewater system when feasible and in the District's discretion. The provision of water service by the District to any new subdivision or development without requiring wastewater collection facilities to be constructed therein shall be considered an exception, requiring compelling evidence that the public health and environment will be protected for the long term.

(c) The District may require an owner of land located within the District's certificated service area to connect to the District's wastewater system, when feasible and in the District's discretion, even if an on-site wastewater holding or treatment facility was installed on said land prior to January 18, 2014, provided the District's wastewater collection system is contiguous or adjacent to the boundary of said land.

(2) All costs for connecting to the District's wastewater system in excess of the standard costs required under Section G below must be paid for by the wastewater service applicant. The District must review and approve all plans and specifications for any connection to the wastewater system prior to construction. [Texas Water Code § 65.201(a) and Texas Water Code § 49.277].

(C) Requirements for Standard and Non-Standard Service.

(1) The applicant shall complete and sign a Service Application and Agreement or Non-Standard Service Application as applicable. [*See* Appendix A, Form A-01; Appendix B, Form B04].

(2) As a condition for service, the applicant shall complete and execute an Easement and Right-of-Way, Sanitary Control Easement and/or such other easement form(s) required by the District to obtain a dedicated easement(s) to allow the District a right of access to construct, install, maintain, replace, upgrade, inspect or test any facility necessary to serve the applicant's, as well as the District's, purposes in providing system-wide service. [*See* Tex. Water Code § 49.218; Appendix A, Form B-05]. This requirement may be delayed for non-standard service applicants. New meters shall be located within a utility easement at or near the boundary line (usually nearest a road) of the property designated for service.

(3) At the request of a property owner or an owner's authorized agent, the District shall install an individual Master Meter owned by the District in an apartment house, manufactured home rental community, multiple use facility, or condominium on which construction begins after June 23, 2015, unless the District determines that the installation of individual meters is not feasible. If the District determines that installation of individual Master Meter is not feasible, the property owner or manager shall install a plumbing system that is compatible with the installation of sub meters or individual meters. The District shall be entitled to

the payment of reasonable costs to install individual meters pursuant to 30 TAC § 291.122(d) and Section F of these Rules and Regulations. The cost of individual meter installations shall be prepaid by the property owner as well as the cost of any additional facilities or system improvements required to satisfy the total water/ wastewater service demand of the property at full occupancy, as determined under applicable provisions of Section F. The District shall consider master metering and/or non-standard wastewater service to apartments, condos, trailer/RV parks, or business centers and other similar type enterprises at an applicant's request provided the total number of units to be served are all:

(a) Owned by the same person, partnership, cooperative, corporation, agency, or public or private organization of any type, but not including a family unit;

(b) Directly inaccessible to a public right-of-way; and

(c) Considered a commercial enterprise (*i.e.*, for business, rental or lease purposes).

(4) Notice of application approval and costs of service as determined by the District shall be presented to the applicant in writing and shall remain in effect for a period not to exceed thirty (30) days. After that time the applicant must re-apply for service. [*See* 30 TAC § 291.81(a) (1)].

(5) The Applicant shall provide proof of ownership to property for which service has been requested in a manner acceptable to the District. Proof of ownership shall consist of warranty deed, deed of trust or other recordable documentation of fee simple title to the real estate designated to receive service. (Texas Water Code 13.002 (11) and 67.016(d)).

(6) If a water main has been located in the public right-of-way and is adjacent to applicant's property, prior to receiving the requested service, the applicant shall grant an easement as required under these Rules and Regulations. In addition to the normally required fees for new customer service, the applicant may be asked to pay such sums as are reasonably necessary to remove or cap the existing water main in the public right-of-way and to construct the appropriate line or lines within that easement for the District's system-wide service [Texas Water Code § 49.212(a) and Texas Water Code § 65.205].

(7) If a transferee fails to provide all documentation or information required at the time of application, the District will issue written notice that the applicant must provide the documentation and/or information within ten (10) days or service will be terminated. This provision applies to both standard and non-standard service requests.

3. Activation of Standard Service

(A) New Service Connection. The District shall charge a Connection Fee/Impact Fee/Capital Recovery Fee and other applicable fees as required under Section G of these Rules and Regulations. The Connection Fee/Impact Fee/Capital Recovery Fee and other fees shall be quoted in writing to the applicant. The Connection Fee/Impact Fee/Capital Recovery Fee is non-refundable unless the following circumstances exist: The customer will have one year from the date of the application to pay to install the meter. At the end of the year, the customer must pay to have the meter installed. If the customer fails to pay, CCSUD will refund the Deposit and Impact Fee/Capital Recovery Fee less any balance owed on the account and close the account. The customer will immediately forfeit their claim to water capacity.

An applicant must pay all fees as a condition to consideration for service. Upon initiation of account (Service Application completed and Connection Fee/Impact Fee/Capital Recovery Fee and Deposit both paid), the customer will begin receiving a monthly bill for all applicable fees. Services applications will not be accepted without payment from the customer.

(B) Re-Service. On property where service previously existed, the District may charge a deposit and all fees applicable to restoration of service. In addition, the District may charge accumulated Reserved Service Fees which have been assessed to the inactive account on a monthly basis. This will allow the District to recover the costs of reserving capacity to the location for which re-service has been requested. If restoration of service is not requested, this fee will accumulate monthly until the total balance of the Reserved Service Fees equals the amount of the connection fee initially paid for new service to the property. After this time the service equipment may be removed by the District and any future request for service to the property shall be treated as an application for new service.

(C) Performance of Work. The District shall install all taps and equipment necessary to provide service within twenty (30) working days after approval and receipt of payment of all quoted fees and charges. This time may be extended for installation of facilities and equipment necessary to serve a request for non-standard service or due to weather or other emergencies. The District may not install a water meter, unlock a water meter or otherwise establish or re-establish water service to any property without the owner of such property or other person who has management or control of the subject property being physically present at the time that water service is established in order to inspect or observe the property for possible water leaks or water usage that, if left unattended, could cause water or other damage to the property.

(D) Customer Service Inspections. The District shall require a customer service inspection of an applicant's property and private water distribution facilities to insure compliance with state required Minimum Acceptable Operating Practices for Public Drinking Water Systems as promulgated by the Texas Commission on Environmental Quality or successor agency. [*see* Section B.8]. A Customer Service Inspection (CSI) Fee will be charged at the time of the inspection per Section G of these Rules and Regulations. (1) As a result of such an inspection, the District may require that a customer properly install a backflow prevention device, and inspect, and test the device, and provide all required documentation to the District, all at the customer's expense. [*see* 30 TAC § 290.46(j)]. (2) After the backflow prevention device has

been installed, the District must have documentation that a qualified person has inspected/tested the installation prior to activation of service. Thereafter the homeowner shall have annual inspections performed by a qualified person and provide a copy of the testing and recertification to the District. Should the homeowner fail to provide proof of testing and recertification after proper notice from the District, The District may schedule the testing and recertification by District personnel. The homeowner shall be billed, on their monthly water/wastewater bill, the Inspection Fee per Section G.

4. Activation of Non-Standard Service

(A) Activation of Non-Standard Service. Activation of non-standard service shall be conducted pursuant to Section F of these Rules and Regulations.

(B) Re-Service. The provisions applicable to standard re-service requests under the previous subsection 3(B) shall also apply to non-standard re-service requests.

5. Changes in Service Classification

If at any time the District determines that the service classification of a customer has changed from that originally applied for and that additional or different facilities are necessary to provide adequate service, the District shall require the customer to re-apply for service under the terms and conditions of these rules and Regulations. Customers failing to comply with this provision shall be subject to Disconnection with Notice under subsection 13(A) below.

6. Owners and Tenants

The owner of property designated to receive service according to the terms of these Rules and Regulations is responsible for all fees and charges due the District for service provided to such property. If an owner has an existing alternate billing agreement for rental accounts, the District may bill a tenant for service as a third party, but the owner remains fully responsible. No new alternate billing agreements will be allowed.

7. Refusal of Service

(A) The District may refuse to serve an applicant for the following reasons:

(1) Failure of an applicant to complete all required easement forms and pay all required fees and charges;

(2) Failure of an applicant to comply with the rules, regulations and policies of the District, including but not limited to the failure to pay amounts due the District for at another location in the District.

(3) Existence of a hazardous condition at the applicant's property which would jeopardize the welfare of other customers of the District upon connection;

(4) Failure of an applicant to provide representatives or employees of the District reasonable access to property, for which service has been requested;

(5) Failure of Applicant or Transferee to provide proof of ownership, to the

satisfaction of the District, of property for which the tap has been requested;

(6) Failure of an applicant to comply with all rules and regulations of the District which are in these Rules and Regulations on file with the state regulatory agency governing the service applied for by the applicant; or

(7) The District has determined that the applicant's service facilities are known to be inadequate or of such character that satisfactory service cannot be provided.

8. Applicant's Recourse

In the event the District refuses to serve an applicant under the provisions of this section, the District shall inform the applicant in writing of the basis of its refusal and that the applicant may file a written complaint pursuant to the District's grievance procedures. See Section 18 of this Section E.

9. Deferred Payment Agreement

The District may enter into a Deferred Payment Agreement, not to exceed a term of six (6) months. **These payment arrangements must be set up prior to 5PM on the due date (10th) for the month when the payment is due. These payment arrangements may be made for water consumption only.** The customer must pay the base rate and applicable fees prior to a Deferred Payment Agreement being initiated. There will be a $10 per month administrative fee for each month the arrangement exists. There is no penalty for paying the arrangement off early. All Deferred Payment Agreement payments and the current bill must be paid before 5PM on the due date (10th monthly) or the agreement will be considered broken and all applicable amounts will be due or the customer will be subject to disconnect immediately.

10. Charge Distribution and Payment Application

(A) Base Rate. The applicable Base Rate shall be charged for the billing period from the first day of the billing cycle to the last day of the billing cycle. Charges may be prorated for meter installations and service terminations falling during the billing period. Billings for this amount shall be mailed on or about the twenty-eighth (28th) day of the month preceding the month for which this charge is due. All active service connections shall be subject to this charge whether or not there is use of service.

(B) Gallonage Charge. A Gallonage Charge shall be billed at the rate specified in Section G and shall be calculated to the gallon. Charges for water and wastewater usage are based on monthly meter readings and are calculated from reading date to reading date. The District shall take all meter readings used in calculating billing.

(C) Posting of Payments. All payments shall be posted against previous balances prior to posting against current billings.

11. Due Dates, Delinquent Bills, and Service Disconnection Date

(A) Billing Cycle. The District shall mail all bills and/or send ebill notifications on or about the twenty-eighth (28th) day of the month. All bills shall be due and payable upon receipt and are past due after 5:00 pm on the 10th day of the month or the next business day after a weekend or District Holiday, after which time a penalty shall be applied pursuant to Section G. Payment for utility service is delinquent if the full payment, including the late fees and regulatory assessments, is not received by 5:00 pm on the due date regardless of the payment method. Payment made using the District's online service or phone payment (IVR) must post by 5:00 pm on due date in order to be considered paid by due date. If the twenty-eighth falls on a weekend or holiday, bills shall be mailed by the immediately preceding workday. If the tenth falls on a weekend or holiday, the due date shall be the next day the District office is open for business after said weekend or holiday.

(B) Delinquent Billing Cycle. Delinquent notices shall be mailed after the payment due date (10th of each month) allowing approximately ten (10) additional days for payment prior to disconnection. The disconnect date shall generally be during the fourth week of the month. A schedule of all disconnection dates will be posted on the District's website, at the administrative offices and on at least one billing statement. A non-payment fee shall be applied and service shall be subject to disconnection if payment is not received at the District office before **7:00 a.m. CST** on the day of disconnect indicated on the delinquent bill. Payments made regardless of payment method must post before **7:00 a.m. CST** on the day of disconnect to avoid disconnect and non-payment fee.

12. Rules for Disconnection of Service

The following describes the rules and conditions for disconnection of service. For the purpose of disconnecting wastewater service under these policies, water service will be terminated in lieu of disconnecting wastewater service. In instances of non-payment of wastewater service charges or other wastewater service violations by a customer that does not receive water service from the District, the District has the option to disconnect the wastewater tap or take other appropriate actions as determined by the District.

(A) Disconnection with Notice. Water service may be disconnected after proper notice for any of the following reasons:

(1) Failure to pay a delinquent account for utility service provided by the District, failure to timely provide a deposit, or failure to comply with the terms of a Deferred Payment Agreement;

(2) Violation of the District's rules pertaining to the use of service in a manner which interferes with the service of others;

(3) The operation of non-standard equipment, if a reasonable attempt has been made to notify the customer and the customer is provided with a reasonable opportunity to remedy the situation;

(4) Failure to comply with the terms of a service agreement, Non-Standard Service Contract or these rules and Regulations;

(5) Failure to provide District personnel or designated representatives access to a meter or to property at which water service is received for purposes of inspecting and verifying the existence of potential hazardous conditions or policy violations;

(6) Any misrepresentation of fact by an applicant or customer on any form, document or agreement required by the District;

(7) Or failure to re-apply for service upon notification by the District that customer no longer meets the service classification originally applied for under the original service application.

(B) Disconnection Without Notice. Water service may be disconnected without prior notice for the following reasons:

(1) Where a known dangerous or hazardous condition exists for which service may remain disconnected for as long as the condition exists, including but not limited to a violation of Chapter 341 of the Health and Safety Code and regulations adopted pursuant thereto, or where the District has reason to believe a dangerous or hazardous condition exists and the customer refuses to allow access for the purpose of confirming the existence of such condition and/or removing the dangerous or hazardous condition [*see* Sections E.3(d), E.22; 30 TAC § 290.46 (j)];

(2) Where service is connected without authority by a person who has not made application for service;

(3) Where service has been reconnected without authority following termination of service for nonpayment; or

(4) In instances of tampering with the District's meter or equipment, by-passing the meter or equipment, or other diversion of service.

(5) A threat to perform or actual performance of : (a) bodily injury to any District employee, agent or representative or (b) damage to any District property. The display of any firearm or other weapon in a confrontational, menacing or threatening manner shall be deemed to be a threat to perform bodily injury regardless of the condition of said firearm or weapon.

Service shall be discontinued without further notice when installations of new facilities or repair of existing facilities are found to be in violation of this regulation until such time as the violation is corrected.

(C) Disconnection Prohibited. Utility service may not be disconnected for any of the following reasons:

(1) Failure to pay for merchandise or charges for non-utility service provided by the District, unless there is an agreement whereby the customer guaranteed payment of non-utility service as a condition of service or the District has a contract with another governmental unit to collect for services rendered to the customer by such other government unit such as water, wastewater, or solid waste services, etc.;

(2) Failure to pay for a different type or class of utility service unless a fee for such service is included in the same bill;

(3) Failure to pay charges arising from an under billing due to any misapplication of rates more than six (6) months prior to the current billing;

(4) Failure to pay the account of another customer as guarantor thereof, unless the District has in writing the guarantee as condition precedent to service;

(5) Failure of the customer to pay charges arising from an under billing due to any faulty metering, unless the meter has been tampered with or unless such under billing charges are due under subsection 20 below (Inoperative Meters);

(6) Failure of the customer to pay estimated bill other than a bill rendered pursuant to an approved meter reading plan, unless the District is unable to read the meter due to circumstances beyond its control; or

(7) In response to a request for disconnection by an owner of rental property where the tenant is billed directly by the District as authorized by the owner, and the renter's account is not scheduled for disconnection under the rules for disconnection of service in these rules and Regulations.

(D) Disconnection on Holidays and Weekends. Unless a dangerous condition exists or the customer requests disconnection, service shall not be disconnected on a day, or on a day preceding a day, when District personnel are not available to the public for the purpose of making collections and reconnecting service.

(E) Disconnection Due to Utility Abandonment. The District may not abandon a customer or a certificated service area without written notice to its customers and all similar neighboring utilities, and obtained approval from the TCEQ. However, any customer whose service has been cut for failure to pay a delinquent account for utility service for 30 days or more will be considered to have permanently surrendered that meter. The meter will be pulled, the deposit applied and the account closed. Any outstanding balances will go to collections. Any attempt to reestablish the account will start over with an application and payment of all fees and charges required of a new customer, including impact fees if none were paid for the previous meter. If the prior owner is the applicant, all past fees, penalties and charges must be made current.

(F) Disconnection Due to Illness or Disability. The District may not discontinue service to a delinquent residential customer permanently residing in an individually metered dwelling unit when that customer establishes that discontinuance of service will result in some person at that residence becoming seriously ill or more seriously ill if service is discontinued. To avoid

disconnection under these circumstances and waiver of the late fee, the customer must provide an original written statement from a treating physician to the District the day prior to the due date (10th of the month). Service may be disconnected in accordance with subsection 12 (a&b) of section E if the next month's bill and the past due bill are not paid by the due date of the next month's bill, unless the customer enters into a Deferred Payment Agreement with the District.

(G) Disconnection of Master-Metered Accounts. When a bill for service to a master-metered account customer is delinquent, the following shall apply:

(1) The District shall send a notice to the customer as required. This notice shall also inform the customer that notice of possible disconnection will be provided to the customer's tenants or occupants of the master metered property in five (5) days if payment is not rendered before that time.

(2) At least five (5) days after providing notice to the customer, and at least five (5) days prior to disconnection, the District shall post notices stating "Termination Notice" in public areas of the master-meter property to notify tenants or occupants of the scheduled date for disconnection of service. The tenants or occupants may pay the District for any delinquent bill on behalf of the customer/account to avert disconnection or to reconnect service to the master-meter property.

(H) Disconnection of Temporary Service. When an applicant with temporary service fails to comply with the conditions stated in the service agreement or provisions of these rules and Regulations, the District may terminate temporary service with notice.

(I) Payment During Disconnection. The District is not allowed to accept payment of a bill when a District employee or designated representative is at the customer's property for the purpose of disconnecting service. Employees in the field are not allowed to collect.

13. Returned Check Policy

Payment by check which has been rejected for insufficient funds, closed account, or for which a stop payment order has been issued is not deemed to be payment to the District. The District shall call number or send an email to the contact information on file in an attempt to resolve the matter. The District may also mail, via the U.S. Postal Service, notice that the returned instrument must be redeemed and an additional returned check fee paid at the District office within ten (10) days of the date of the notice or the District shall file charges with the County District Attorney. Redemption of the returned instrument and payment of the returned check fee shall be made by credit card, cash, money order, or certified check. Failure to meet these terms shall result in disconnection of service. A customer shall be considered a bad credit risk for having an instrument returned as insufficient or non-negotiable for any reason for any two billing periods within a 12-month period, and shall be placed on a "cash-only" basis for a 12-month period during which the District will only accept payment by means of a credit card, certified check, money order or cash.

In the event that a payment by check which has been rejected for insufficient funds, closed account, or for which a stop payment order has been issued was presented to avoid

disconnection or to reconnect a disconnected account, the water service shall be disconnected unless the customer can be contacted and the matter resolved within one business day.

14. Billing Cycle Changes

The District reserves the right to change its billing cycles if the workload requires such practice. After a billing period has been changed, bills shall be sent on the new change date unless otherwise determined by the District.

15. Back-Billing

If a customer was undercharged, the District may back bill the customer for the amount which was under billed. The back billing shall not exceed six (6) months unless such undercharge was the result of meter tampering, bypass, or diversion of service by the customer as defined in subsections 22 and 23 below. If the under billing is $25 or more, the District shall offer to enter into a Deferred Payment Agreement with such customer for the same length of time as that of the under billing. In cases of meter tampering, bypass, or diversion of service, the District may, but is not required to, offer a customer a deferred payment plan.

16. Disputed Bills

In the event of a dispute between a customer and the District regarding any monthly bill, the dispute shall be resolved or disposed of in accordance with the Grievance Procedures set forth in the following Subsection 18, except as follows:

(A) Notice of the bill dispute must be submitted to the District, in writing, and a payment equal to the customer's average monthly usage at current rates must be received by the District prior to the due date posted on the disputed bill.

(B) The customer shall not be required to pay the disputed portion of a bill which exceeds the amount of that customer's average monthly usage at current rates pending the completion of the determination of the dispute. For purposes of this subsection, the customer's average monthly usage shall be the average of the customer's usage for the preceding 12-month period. Where no previous usage history exists, consumption for calculating the average monthly usage shall be estimated on the basis of usage levels of similar customers under similar conditions.

(C) Notwithstanding any other section of these Rules and Regulations, a utility customer's service shall not be subject to discontinuance for nonpayment of that portion of a bill under dispute pending the completion of the determination of the dispute. The customer is obligated to pay any billings not disputed as established in subsection 13 of these rules and Regulations (relating to Disconnection of Service).

17. Grievance Procedures

The District's standard policy for any and all claims filed is that the District is a political subdivision of the State of Texas and as such enjoys immunity from suit and liability for alleged claims; the District does not intend to waive its immunity protections beyond and waiver pursuant to the Texas Tort Claims Act. In addition to the procedure provided in sections

101.101-101.107 of the Texas Civil Practice and Remedies Code, any aggrieved party will have an opportunity to voice concerns or grievances to the District by the following means and procedures:

(A) The aggrieved party must first submit written notice to the General Manager or authorized staff member stating the concern or grievance and the desired result. The General Manager shall investigate the matter and provide a response to the aggrieved party within fourteen (14) days after receipt the written notice of grievance.

(B) If the General Manager does not resolve the grievance to the satisfaction of the aggrieved party, the party may appeal the General Manager's decision, in writing, to the President of the Board of Directors for disposition. The written notice of appeal must be submitted to the District within seven (7) days after the date of the General Manager's written response to the notice of grievance.

(C) Upon receipt of an appeal, the President of the Board of Directors shall review the request and determine the best means by which the grievance shall be resolved. The President may direct that a grievance be heard by the Board of Directors for final disposition, or initially by District staff appointed by the President and serving in an advisory capacity to the Board of Directors. The President shall also determine a reasonable time and place for the grievance to be heard by the Board of Directors, but such hearing shall take place within sixty (60) days of the date that the President received the written notice of appeal. Final disposition by the Board of Directors shall be reported to the aggrieved party in writing.

(D) If under this subsection an aggrieved party contests a charge or fee as sole or partial basis of a grievance, the contested charge or fee shall be suspended until such time as the grievance is satisfactorily resolved by the General Manager, the deadline for delivering an appeal to the President of the Board of Directors has passed, or the Board of Directors has rendered its final disposition of the dispute. This provision does not apply to disputed monthly bills pursuant to subsection 17 above.

18. Inoperative Meters

Water meters found inoperative will be repaired or replaced by the District within a reasonable time. If a meter is found not to register for any period, unless by-passed or tampered with, the District shall make a charge for units used, but not metered, for a period not to exceed three (3) months, based on amounts used under similar conditions during the period preceding or subsequent thereto, or during corresponding periods in previous years.

19. Bill Adjustment Due To Meter Error

The District shall test any customer's meter upon written request of the customer. In the event the meter tests within the accuracy standards of The American Water Works Association, a meter test fee as prescribed in Section G of this Order shall be imposed. In the event the test results indicate that the meter is faulty or inaccurate (has over charged the customer), the test fee shall be waived, the meter shall be calibrated or replaced, and a billing adjustment may be made as far back as six (6) months. The billing adjustment shall be made to the degree of the meter's inaccuracy as determined by the test. The customer must complete and sign a Meter Test Authorization and Test Report prior to the test. [see Appendix A, Form A-08].

20. Leak Adjustment Policy

In the event that the amount of a customer's monthly bill is higher than normal due to leakage, the customer may submit a written leak adjustment request to the District to be billed for water used at the posted per thousand rates. The District may choose to bill for leakage at an adjusted rate. The District may grant an adjustment if each of the following apply:

(A) The amount of excess water usage reflected in the contested bill must be at least two (2) times the average monthly usage for that customer;

(B) The customer must submit documentary evidence that the leak has been repaired, such as a statement from a plumber and/or receipt(s) for parts purchased to repair the leak; and

(C) The customer has not requested a leak adjustment during the previous twelve (12) months regardless of the number of meters serving the customer's property or properties.

21. Meter Tampering and Diversion of Service

All meters connected to the District's water system are the sole property of the District and shall be provided, owned, installed and maintained by the District. Meter tampering, bypassing a meter or service equipment, and diversion of service are prohibited. Meter tampering, bypass, or diversion shall be defined as tampering with the a meter or service equipment causing damage or unnecessary expense to the District, bypassing a meter or service equipment, or other instances of diversion of service, such as:

(A) Installing a meter or service equipment without authorization from the District;

(B) Removing or altering locks or shut-off devices installed by the District to discontinue service;

(C) Removing, altering or physically disorienting a meter or service equipment; inserting or attaching objects to a meter or service equipment to bypass or divert service;

(D) Other electrical and/or mechanical means of tampering with, by-passing, or diverting service;

(E) Connecting or reconnecting service without District authorization; or connecting to the service line of an adjacent customer of the District.

In addition to any other penalties or remedies provided for in these Rules and Regulations or under Texas civil law, persons who tamper with meters or divert service and unauthorized users of District services may be prosecuted to the extent allowed by law under Texas Penal Code § 28.03 (Criminal Mischief) or § 31.04 (Theft of Service) as appropriate.

22. Damage to District Facilities

(A) Damage to Meter and Appurtenances. No person other than a duly authorized employee or agent of the District shall be permitted to tap or make any connection to the water distribution lines of the District's water system, except for emergency fire-fighting purposes, or make any repairs or additions to or alterations in any meter, meter box, tap, pipe, cock or other fixture connected with the water system, or any manhole, main, trunk or appurtenance of the District's wastewater system. The District reserves the right, immediately and without notice, to remove the meter or disconnect water service to any Customer whose meter has been tampered with and to assess an equipment damage fee to the Customer under Section G of these rules and Regulations.

(B) Right to Repair. The District reserves the right to repair any damage to the water and wastewater systems without prior notice and to assess against any Customer causing the damage such penalties as is provided for by law and these rules and Regulations, in addition to those charges necessary to repair system damage.

23. Meter Relocation

The District shall permit the relocation of meters or services provided that:

(A) The relocation is limited to the requesting customer's existing property designated to receive service;

(B) A current easement for the proposed location has been granted to the District;

(C) Service capacity is available at the proposed location; and

(D) The customer pays a Meter Relocation Fee and any additional costs that may be incurred by the District to relocate the meter. [*see* Section G]. In order to improve the operations of the District, the District may relocate a meter at any time at no cost to the customer.

24. Prohibition of Multiple Connections to a Single Tap

No more than one (1) residential, commercial or industrial service connection is allowed per meter per Texas Administrative Code (30 TAC) [291.44(d)(4)]. The District may require the owner of an apartment building, mobile home/RV park or other commercial account to apply for a single meter as a "Master Metered Account" pursuant to Section E.2(C)(3) of these Rules and Regulations. Any unauthorized sub metering or diversion of service shall be considered a "multiple connection" and subject to disconnection of service. If the District has sufficient reason to believe a multiple connection exists, the District shall discontinue service under the Disconnection with Notice provisions in subsection 14(a) above.

25. Customer Responsibilities

(A) District Access to Meters. Customers shall allow District employees and designated representatives access to meters for the purpose of reading, testing, installing, maintaining and removing meters and using utility cutoff valves. If access to a meter is hindered so that the District is prevented from the reading of the meter, an estimated bill shall be rendered to the customer for the month and a notice of the hindrance shall be sent to the customer. If access is denied for three (3) consecutive months after notice to the customer, then service shall be discontinued and the meter removed with no further notice. [*see* Section E.3 (d)].

(B) Compliance with On-Site Service and Plumbing Requirements for Water. Customers shall be responsible for complying with all District, local, state and federal codes, requirements and regulations concerning on-site service and plumbing facilities.

(1) All connections shall be designed to ensure against back-flow or siphonage into the District's water system. In particular, livestock water troughs shall be plumbed above the top of the trough with an air space between the discharge and the water level in the trough. [30 TAC § 290.46].

(2) The use of pipe and pipe fittings that contain more than 0.25% lead or solder and flux that contain more than 0.2% lead is prohibited for any plumbing installation or repair of any residential or non-residential facility providing water for human consumption and connected to the District's facilities. Customer service pipelines shall be installed by the applicant. [30 TAC § 290.46].

(C) Compliance with On-Site Service and Plumbing Requirements for Wastewater. Each Development has its own unique design, engineering needs and requirements. Therefore, the Requirements for Compliance with the Specific Development's On-Site Service and Plumbing are contained in Exhibit B of these Rules and Regulations.

(D) Payment on Multiple Accounts. A customer owning more than one service connection shall keep all payments current on all accounts. Failure to maintain current status on all accounts shall be enforceable as per the Service Application and Agreement executed by the customer.

(E) Extent of District Ownership and Maintenance. The District's ownership and maintenance responsibility of water distribution and metering equipment shall end at a customer's meter nipple. Therefore, all water usage registering upon and/or damages occurring to the metering equipment owned and maintained by the District shall be subject to charges pursuant to these rules and Regulations.

(F) Cut-off Valve Requirement. The District shall require each customer to have a cut-off valve on the customer's side of the meter for purposes of isolating the customer's service pipeline and plumbing facilities from the District's water pressure. The valve shall meet AWWA standards (a ball valve is preferred). The customer's use of the District's curb stop or other similar valve for such purposes is prohibited. A customer shall be subject to charges for any damage to the District's meter or other service equipment. A cut-off valve may be installed as a part of the original meter installation by the District.

26. Prohibited Plumbing Practices

(A) No direct connection between the public drinking water supply and a potential source of contamination is permitted. Potential sources of contamination will be isolated from the public water system by an air gap or an appropriate backflow prevention device.

(B) No cross-connection between the water supply and a private water system is permitted. These potential threats to the public drinking water supply must be eliminated at the service connection by the installation of an air-gap or a reduced pressure-zone backflow prevention device.

(C) No connection which allows water to be returned to the public drinking water supply is permitted.

(D) No pipe or pipe fitting which contains more than two-tenths of one percent (0.02%) lead may be used for the installation or repair of plumbing at any connection which provides water for human use.

(E) No solder of flux which contains more than two-tenths of one percent (0.02%) lead can be used for the installation or repair of plumbing at any connection which provides water for human use.

(F) District added latest version of unified plumbing code or locality rules.

27. Excluded Flow and Waste

(A) No waste material, which is not biologically degradable, will be permitted to be discharged into the district's facilities, including mud and debris accumulated during service line installation.

(B) No industrial wastes other than domestic sewage shall be discharged into the District's wastewater system unless approved in writing by the Board of Directors. No toxic wastes, backwash wastes from water softener(s), wastes which would damage the collection and treatment facilities or wastes which would interfere with the waste treatment process shall be discharged into the District's wastewater system.

(C) Industrial wastes shall not be discharged into the District's wastewater system. No cooling water shall be discharged into the District's wastewater system.

(D) No downspouts, yard or street drains, or gutters will be permitted to be connected into the District's wastewater system.

(E) No ground water drains, water softener drains, foundation drains, or other subsurface drains shall be connected in the District's wastewater system.

(F) No effluent drains from existing and/or abandoned septic tanks or field lines will be permitted to remain in service.

28. Water Service Connections

(A) Applications for water service connections shall be filed with the District on approved forms. Applicants shall meet all District requirements for service, including the grant of any necessary water and wastewater easements (as determined by the District) and the installation of a cut-off valve at the expense of the service applicant.

(B) No person, other than District employees or designated representatives, shall be permitted to tap or make any connection with the mains or service lines of the District's water system, or make any repairs or additions to or alterations in any tap, pipe, cock or other fixture connected to a water service line.

(C) A customer must allow his or her property to be inspected for possible cross-connections and other undesirable plumbing practices. These inspections will be conducted by the District prior to initiating service and may be conducted periodically thereafter. All inspections will be conducted during the District's normal business hours. The customer must, at the customer's expense, properly install a backflow prevention device as required by the District.

(D) All costs to extend or oversize District water mains or service lines to serve any residential or commercial user or any undeveloped area within the District shall be the sole responsibility of the property owner and/or developer requesting service.

29. Standards for Water Service Lines

The following standards govern the installation of customer service lines for water service to residences or commercial buildings within the District:

(A) All new residential or commercial connections to the District's water system shall be made in accordance with previous subsection 29 and the Rules and Regulations for Public Water Systems issued by the TCEQ as set forth in Subchapter D, Chapter 290, Title 30 of the Texas Administrative Code. In the event of a conflict between the provisions of subsection 29 and the TCEQ's Rules and Regulations for Public Water Systems, the more stringent shall apply.

(B) Water service lines shall be of Type "K" copper or polyvinyl chloride PVC DR 18 as approved by the District. Fittings used with Type "K" copper service lines shall be of the flared or compression type. Fittings used with PVC service lines shall be in accordance with the pipe manufacturer's specifications.

(C) Separation distances between water and wastewater service lines shall be in accordance with 30 TAC §290.44(e).

(D) Installation of water and wastewater service lines in a "shared' trench is prohibited.

(E) A minimum of four feet (4') of Type "K" soft copper pipe shall be installed at the end of the water service line at the connection to the water meter.

(F) Water service lines shall be bedded with a minimum of 6” of well graded crushed stone or pea gravel below the pipe. The trench bottom and walls shall be cleared of all protruding rocks which could damage the pipe before the crushed stone bedding is placed.

(G) A District-owned water meter and a District-approved meter box shall be installed by the District or its designated representative.

(H) Potable water supply piping, water discharge outlets, backflow prevention devices, or similar equipment shall not be located so as to make possible the submergence of such equipment in any contaminated or polluted substance.

(I) Lawn sprinkling systems shall be equipped with an approved vacuum breaker or backflow prevention device installed in the discharge side of each of the last valves. The vacuum breaker shall be installed at least six inches (6”) above the surrounding ground and above a sufficient number of heads so at no time will the vacuum breaker be subjected to back pressure or drainage.

(J) The District’s water system shall be protected from swimming pool makeup water by means of an approved backflow prevention device or an adequate air gap.

(K) Upon the installation of a service line, a request for inspection shall be made to the District’s office, and the line shall not be back-filled or placed into service until the District has inspected and approved of the installation. The District shall perform the inspection within forty-eight (48) hours of receiving the request.

(L) Back filling of service line trenches must be accomplished within twenty-four (24) hours of inspection and approval, and no debris will be permitted in any service line trench.

30. Wastewater Service Connections

(A) Applications for wastewater service connections shall be filed with the District on approved forms. All applicants for wastewater service shall grant an easement to the District which shall own and maintain the “on property” wastewater facilities as shown in Appendix “A” and associated discharge piping from the Septic Tank Effluent Pump (STEP) station to the wastewater low pressure force main or service line. The property owner or Developer shall be required to construct the customer service line from the foundation of the residence or commercial building to the STEP station “on property” wastewater facilities.

(B) The Property Owner or Developer shall construct all wastewater service facilities from the “on property” STEP station of a residence or commercial building to the District’s wastewater service line, which installation shall include the all necessary equipment necessary to properly collect, treat, and discharge the wastewater stream received from the property.

(C) The applicant shall grant an easement to the District and such access to the property designated to receive service as may be reasonably necessary for the District to maintain the “on property” STEP station and low pressure wastewater connection to the force main to serve the residential or commercial building thereon. The District shall designate the locations of the “on property” wastewater facilities on the property.

(D) The District may remove all grass, bushes, shrubs, soil and other fixtures necessary to maintain the "on property" wastewater facilities. The District shall have no obligation to repair, replace or replant any grass, bushes, shrubs, soil or fixtures removed or damaged during maintenance of the "on property" wastewater facilities.

(E) The District shall inspect all physical connections of a residence or commercial building to the District's wastewater system prior to release for service. Pursuant to these Rules and Regulations, a property owner or developer requesting service shall be responsible for payment of the following fees and charges relative to the connection of wastewater lines:

(1) all costs for the acquisition and/or installation of the "on property" wastewater facilities located at each property to the District's main wastewater line, located within an easement granted by the property owner to the District, including but not limited to wastewater pumps, tanks, fittings, valves, piping and electrical service;

(2) the monthly electrical service costs to provide electrical service to the "on property" wastewater facilities, said electrical costs are included in the monthly Operations and Maintenance Base Rate per Section G; and

(3) a tap inspection fee per Section G for connection of the "on property" wastewater facilities to the District's main wastewater line, which inspection shall be made solely by the District or the District's designated representative.

(G) "On property" wastewater facilities shall be placed within fifty feet (50') of the foundation of the residence or commercial building to be served. The District shall make a reasonable attempt to consult with each property owner about locations for the "on property" wastewater facilities; however, the final location of the "on property" wastewater facilities shall be made solely by the District in consultation with the property owner or Developer, based on the practical limitations of construction.

(H) All costs to extend or oversize District wastewater mains or service lines to serve any residential or commercial user or any undeveloped area within the District shall be the sole responsibility of the property owner and/or developer requesting service. From and after June 23, 2015, all new customers of the District shall connect to wastewater facilities that are available within three hundred feet (300') of the property of any new customer. In addition, such new customer is prohibited from the installation of private on-site wastewater holding or treatment facilities.

(I) From and after June 23, 2015 all new developments within the District's service area shall be required to connect to the District's wastewater collection system, when feasible and appropriate. Providing water service to any new subdivision or development by the District without requiring wastewater collection facilities to be constructed therein shall be considered an exception, requiring compelling evidence that the public health and environment will be protected for the long term.

(J) A property owner that has already installed an on-site wastewater holding or treatment facility on land within the District's service area is required to connect to the District's wastewater collection system when the District's wastewater collection system is contiguous or adjacent to the property owner's property line. Costs for any and all modifications or changes to the existing on-site wastewater holding or treatment system to accommodate the District's wastewater treatment facility shall be the responsibility of the property owner or Developer.

31. Standards for Wastewater Service Lines

(A) All new residential or commercial connections to the District's wastewater system shall be made in accordance with previous subsection 31 and the Rules and Regulations for Public Water Systems issued by the TCEQ as set forth in Subchapter D, Chapter 217, Title 30 of the Texas Administrative Code. In the event of a conflict between the provisions of subsection 31 and the TCEQ's Rules and Regulations for Public Water Systems, the more stringent shall apply.

32. Standards Details for Service Facilities

All water and wastewater service facilities shall be constructed in accordance with the Water Standard Details and Wastewater Standard Details attached to these rules and Regulations in Appendix C and incorporated herein by reference. In the event of a conflict between these standard details and any other provision of these rules and Regulations, the standard details shall apply. In the instance that a standard detail is required for a portion of the installation of a water or wastewater service facility, the District or District's authorized representative shall be notified and such standard detail shall be provided.

33. Penalties and Enforcement

(A) Penalties. Any person violating any provision of this Section E, as amended, may be subject to a fine of $500.00 or more for each violation. Each day that a violation of this Section E is permitted to exist shall constitute a separate violation. A penalty under this section is in addition to any other penalty or remedy provided by the laws of the State of Texas or these rules and Regulations [Texas Water Code § 49.004(a) and Texas Gov't Code § 27.03)a)(1)].

(B) Liability for Costs. Any person violating any provision of this Section E shall become liable to the District for any expense, loss or damage occasioned by the District by reason of such violation and the District's enforcement thereof. If the District prevails in any suit to enforce these rules and regulations, it may, in the same action, recover any reasonable fees for attorneys, expert witnesses, and other costs incurred by the District before the court.

(C) No Waiver. The failure on the part of the District to enforce any section, clause, sentence, or provision of these rules and Regulations shall not constitute a waiver of the right of the District later to enforce any section, clause, sentence, or provision of these rules and Regulations.

SECTION F: DEVELOPER, SUBDIVISION AND NON-STANDARD SERVICE REQUIREMENTS

1. District Limitations

All applicants shall recognize that the District must comply with state and federal laws and regulations as promulgated from time-to-time, and with covenants of current indebtedness. The District is not required to extend retail utility service to any applicant requesting standard service to a lot or tract in a subdivision where the developer responsible for the subdivision has failed to comply with the requirements of the District's subdivision service extension policies and non-standard service requirements set forth in this section.

2. Purpose

It is the purpose of this section to define the process by which the specific terms and conditions for service to subdivisions and other kinds of non-standard service are determined, including the non-standard service applicant's and the District's respective costs. For purposes of this section, the term "applicant" shall refer to a developer or person that desires to secure non-standard service from the District. The applicant must be the same person or entity that is authorized to enter into a contract with the District setting forth the terms and conditions pursuant to which non-standard service will be furnished to the property. In most cases, the applicant will be the owner of the property for which non-standard service is sought. An applicant other than the property owner must furnish evidence to the District that the applicant has authority to request non-standard service on behalf the owner, or that it otherwise has authority to request non-standard service for the property.

3. Application of Rules

This section is applicable to subdivisions, additions to subdivisions, commercial, industrial and governmental developments, and any situation where additional service facilities are required to serve a single tract of property. Examples of non-standard service to a single tract of land include, without limitation, service requests that require road bores, extensions to the District's distribution system, service lines exceeding two inches (2") internal diameter in size, service lines exceeding twenty feet (20') in length, or which require a meter larger than " 5/8 x 3/4" for service. Most nonresidential service applications will be considered non-standard by the District at its sole discretion. For purposes of these Rules and Regulations, applications subject to this section shall be defined as "non-standard." This section may be altered or suspended for facility expansions constructed by the District at its expense. The District's General Manager shall interpret, on an individual basis, whether or not an applicant's service request shall be subject to all or part of the conditions of this section. For purposes of this section the term "project" includes subdivisions, additions to subdivisions, and commercial, industrial and governmental developments.

This section sets forth the general terms and conditions pursuant to which the District will process non-standard service requests. The specific terms and conditions pursuant to which the District will provide non-standard service in response to any request will depend upon the nature of such request and may be set forth in a contractual agreement to be entered between the District and applicant. Unless specifically approved by the District's Board of Directors, a

non-standard service contract may not contain any terms or conditions that conflict with these Rules and Regulations.

4. Non-Standard Service Application Process

(A) Project Packet. The Applicant contacts the District to receive planning requirements for water and/or wastewater service and general information about the District's service capability. The Applicant will receive a copy of the District's Rules and Regulations, non-standard service application form and a form contract for non-standard service [see Appendix B, Form B-04].

(B) Application Submission and Fees. The Applicant submits three (3) copies of its non-standard Service Application with all supporting documentation and data (plats, engineering studies etc.) to the District office for initial review. At this time, the Applicant may be required to pay to the District the District's non-refundable Service Investigation Fee of $3,000.00 for a project with up to 250 meter or meter equivalents, plus $10.00 for each additional meter or meter equivalent to complete build-out of the project. [NOTE: After the District has been paid the estimated fee for Engineering review, the District will transmit plat/plans to the District engineer for review.] In addition, a non-refundable fee of $1,500 may be required to be paid with each re-submittal of plans to correct deficiencies as identified by the District staff or engineers. All plans and re-submittals shall only be delivered to the District offices where the Applicant will receive a receipt for such plans or re-submittals. Under no circumstance shall the Applicant deliver plans directly to the District engineer. The District reserves the right to increase the review payment for non-typical applications requiring additional administrative, engineer or legal review.

(C) Staff Review. The District staff and the District engineers will review the nonstandard service application together with plans, schedules, data or other materials filed with the District supporting the application and provide feedback to the Applicant regarding service capability, development fees within Rules and Regulations, and any necessary changes in plans. The Applicant should expect at least 30 days for this process.

(D) Non-Standard Contract or ("NSC"). Following the completion of staff review, the District's Board of Directors may review and vote on approval of the NSC during a public meeting of the District Board of Directors. Construction of water and /or wastewater improvements shall not commence until the District approves the Applicant's NSC and all fees required to be paid pursuant to the NSC are paid to the District. The balance of all applicable fees shall be paid upon the District's inspection and approval of construction and prior to the District's acceptance of the improvements constructed by the Applicant and the installation of any water meters within the project.

(E) District Water Use Prohibition. Under no circumstances shall the District provide any water to the project for construction, testing, or other purposes until the District has approved a NSC for the project, and the Applicant has paid all fees and costs then due and payable pursuant to these rules and Regulations and the NSC.

5. Facilities Design

Design Requirements. Upon receipt of a completed Non-Standard Service Application and Service Investigation Fee, the District shall study the design requirements of the applicant's required facilities before preparing a Non-Standard Service Contract in accordance with the following:

(A) The District's consulting engineer may design, or review and approve, plats and plans for all on-site and off-site service facilities for the applicant's requested service in accordance with the District's specifications and any applicable municipal or other governmental codes and specifications. The consulting engineer shall notify the applicant in writing of any necessary changes to applicant's proposed plats and/or plans. Allow a minimum of thirty (30) days for the review process.

(B) The Applicant's consulting engineer shall ensure that all facilities to be constructed by the Applicant meet the demands for service as requested by the Applicant. The District reserves the right to upgrade and/or oversize the planned service facilities to meet future customer demands on condition that the Applicant shall be reimbursed the additional expense of such upgrading and/or over sizing in excess of the Applicant's facility requirements by payment by the District of the actual construction cost of the upgrade, the allowance of credits against connection fees payable by the Applicant equal to the actual construction cost of the upgrade or providing for prorated payments to the Applicant by future Applicants who utilize such upgrades. The method of reimbursement is in the sole discretion of the District.

(C) Water and wastewater line size and location will be determined by the District, whose determination is final.

(D) All potable water distribution systems including pump stations, mains and both ground and elevated storage tanks, shall be designed, installed and constructed in accordance with applicable regulatory agency standards and current American Water Works Association (AWWA) standards with reference to materials to be used and construction procedures to be followed. In the absence of AWWA standards, commission review may be based upon standards of the American Society for Testing and Materials (ASTM), commercial and other recognized standards utilized by licensed professional engineers.

(E) All newly installed pipes and related products must conform to the American National Standards Institute/National Sanitation Foundations (ANSI/NSF) Standard 61 and must be certified by an organization by the ANSI.

(F) All plastic pipe for use in public water systems must also bear the National Sanitation Foundation Seal of Approval (NSF-pw) and have an ASTM design pressure rating of at least 150 pounds per square inch (psi) or a standard dimension ratio of 18 or less.

(G) Any water line extensions constructed by an Applicant shall be constructed completely across (property line to property line) the side of the subdivision or development which is contiguous and adjacent to the road or street on which the main entrance to the project is located.

(H) The water system shall be designed to afford effective circulation of water with a minimum of dead ends. All dead-end mains shall be provided with acceptable flush valves and discharge piping, and all temporary dead-ends should have flush valves. The District may permit dead ends when necessary as a stage in the growth of the water system, but they shall

be located and arranged to ultimately connect the ends to provide circulation. [30 TAC § 290.44(d)(6)].

6. Prepayment of Certain Fees Required

An applicant for non-standard service shall pre-pay certain fees in accordance with the following:

(A) On or before the date that a Non-Standard Service Contract is executed for the construction of service facilities required to provide service to the Applicant's project or a phase thereof, the Applicant shall deposit with the District a sum of money equal to the following: one-half (½) of the Connection Fee, required by Section G of these rules and Regulations, multiplied by the total number of meters or meter equivalents to be developed or located in the project or phase, as applicable. Payment of the foregoing sum is a mandatory prerequisite to the commencement of construction of the water and/or wastewater infrastructure of the project.

(B) Before the Applicant's project or a phase thereof is approved and accepted by the District, the applicant shall pay to the District the remaining fees due the District which have not been paid by the Applicant, including without limitation the remaining balance of the Connection Fees due under the previous subsection (a). This requirement is a mandatory prerequisite to the initiation of water and/or wastewater service to the project pursuant to a Non-Standard Service Contract.

(C) Subsequent purchasers of individual lots shall pay a meter installation fee and a deposit upon applying to the District for activation of service to individual lots.

7. Non-Standard Service Contract

Applicants requesting or requiring non-standard service shall be required to execute a written Non-Standard Service Contract prepared by the District's attorney. [*see* Appendix B, Form B-04]. The District shall prepare and deliver the Non-Standard Service Contract to the Applicant within a reasonable time period as determined by the complexity of the project. The Non-Standard Service Contract shall define the terms of service prior to construction of required service facilities for the project and may include, without limitation, provisions for the following:

(A) Payment of all costs associated with required administration, design, construction and inspection of facilities for water and/or wastewater service to the project;

(B) Procedures by which the applicant shall accept or deny a contractor's bid, thereby committing to continue or discontinue the project;

(C) Amount and payment of capital contributions required by the District in addition to other costs required under this section;

(D) Reservation of service capacity for the applicant and duration of reserved service with respect to the impact the applicant's service demand will have upon the District's system capability to meet other service requests;

(E) Terms by which the applicant shall indemnify the District from all third party claims or lawsuits arising from or related to the project;

(F) Terms by which the applicant shall dedicate all constructed service facilities to the District and by which the District shall assume operation and maintenance responsibility, including any enforcement of warranties related to construction of the service facilities;

(G) Terms by which the applicant shall grant title or easements to the District for right-of-ways, constructed service facilities, and service facility sites, and/or terms by which the applicant shall provide for the securing of required right-of-ways and sites;

(H) Terms by which the District shall review and approve any applicable Non-Standard Service Contract, Three-Way Contract or any other contract related to the project pursuant to current rules, regulations and policies of the District; and

(I) Terms by which the District shall administer the applicant's project with respect to:

(1) The design of the applicant's service facilities;

(2) Securing and qualifying bids;

(3) Execution of the contract;

(4) Selection of a qualified bidder for construction;

(5) Dispensing advanced funds for construction of facilities required for the applicant's service;

(6) Inspecting construction of facilities; and

(7) Testing facilities and closing the project.

The District and Applicant must execute a Non-Standard Service Contract before construction of service facilities for the project is commenced. In the event that the Applicant commences construction of any such facilities prior to execution of the contract, the District may refuse to provide service to the applicant (or require full costs of replacing/repairing any facilities constructed without prior execution of the contract from any person buying a lot or home from applicant), require that all facilities be uncovered by the applicant for inspection by the District, require that any facilities not approved by the District be replaced, or take any other lawful action determined appropriate by the Board of Directors.

8. Property and Easement Acquisition

With regard to construction of facilities, the District shall require private utility easements on private property as per the following conditions:

(A) If the District determines that easements or facility sites outside the Applicant's property are required, the Applicant shall use all due diligence to secure easements or facility sites in behalf of the District. All easements and property titles shall be researched, validated, and recorded by the District at the expense of the Applicant.

(B) All costs associated with facilities that must be installed in public right-of-ways on behalf of the Applicant, due to the inability of the applicant to secure private utility easements, shall be paid by the Applicant. The District reserves the right to secure utility easements or facility sites by eminent domain on its own initiative. The Applicant shall pay all costs, including legal and other professional fees and the condemnation award in the event the District determines that a public necessity exists to secure private utility easements or facility sites in order to provide service to the Applicant's project through eminent domain proceedings.

(C) The District shall require an exclusive dedicated utility easement on the applicant's property (as required by the size of the planned facilities and as determined by the District) and title to property required for other on-site facilities.

(D) Easements and facilities sites shall be prepared by the applicant for the construction of the District's pipeline and facility installations in accordance with the District's requirements and at the expense of the Applicant.

9. Contractor Selection and Qualification

(A) Selection.

Applicants shall choose one of the following methods for selection of a contractor to construct water or wastewater facilities required by the District to serve a project:

(1) The applicant may select a qualified contractor. The District reserves the right to reject any contractor selected by the applicant in accordance with the criteria set forth in the following subsection 9 (B); or

(2) The District's consulting engineer shall advertise for bids for the construction of the applicant's proposed facilities in accordance with generally accepted practices. The applicant shall provide the District with a sufficient number of plans and specifications, without charge, for prospective bidders. The District reserves the right to reject any bid or contractor, the District shall generally award the contract to the lowest and best bidder in accordance with the criteria set forth in the following subsection (B). After the applicant has executed the Non-Standard Service Contract, the applicant shall pay to the District all costs necessary for completion of the project's service facilities prior to construction and in accordance with the terms of the Non-Standard Service Contract.

(B) Qualification Criteria.

(1) The Applicant shall sign the Non-Standard Service Contract noting applicant's willingness to proceed with the project and shall pay all costs in advance of construction associated with the project.

(2) The contractor shall provide an adequate bid bond under terms acceptable to the District;

(3) The contractor shall secure adequate performance and payment bonding for the project under terms acceptable to the District;

(4) The contractor shall supply favorable references acceptable to the District;

(5) The contractor shall qualify with the District as competent to complete the work; and

(6) The contractor shall provide adequate certificates of insurance as required by the District.

10. Construction

(A) All road work shall be completed in accordance with applicable state, county and/or municipal standards prior to construction of project service facilities to avoid future problems resulting from road right-of-way excavation and completion. Subject to approval of the requisite authority, road sleeves may be installed prior to road construction to avoid road damage during construction of applicant's service facilities.

(B) The District shall, at the expense of the applicant, inspect the service facilities to ensure compliance with District standards. If the District determines that water or wastewater facilities are not being constructed in accordance with the plans and specifications approved by the District or the District's standards, then the District reserves the right to stop construction until the defective work has been corrected or replaced.

(C) Construction plans and specifications shall be strictly adhered to, but the District reserves the right to revise any specifications by change-order due to unforeseen circumstances during the design phase or to better facilitate construction and/or operation of the project service facilities. All change order amounts shall be charged to the applicant.

11. Dedication and Acceptance of Service Facilities

Upon proper completion and testing of an applicant's on-site and off-site service facilities, final inspection and approval thereof by the District, and applicant's payment to the District of all required fees and charges in connection therewith, the applicant shall dedicate the service facilities to the District by an appropriate legal instrument approved by the District's attorney, and the District shall accept the dedication. The District shall thereafter own the service facilities subject to applicant's maintenance bond in an amount of not less than twenty percent (20%) of the total construction cost of the service facilities and for a term of not less than two (2) years. The maintenance bond is subject to prior approval by the District's attorney.

12. Service within Subdivisions

The District's obligation to provide service to any customer located within a project governed by this Section F is limited to the service specified in the NSC. The Applicant is responsible for paying for all costs necessary to provide non-standard service to a project as determined by the District under the provisions of these rules and Regulations, and in particular, the provisions of this section and the NSC. Should the applicant fail to pay these costs, the District has the right to require payment of these costs by any one or more of the persons purchasing lots within such subdivision before the District is obligated to provide water or wastewater service to the subdivision. Applicant is required to notify respective buyers in writing of its failure to pay these costs. In addition, the District may elect to pursue any remedies provided by the Non-Standard Service Contract and the laws of Texas.

SECTION G: RATES AND SERVICE FEES

(UNLESS SPECIFICALLY DEFINED IN THESE RULES AND REGULATIONS, ALL FEES, RATES, AND CHARGES AS STATED SHALL BE NON-REFUNDABLE.)

1. Classes of Users

(A) All users of the District's water and wastewater services shall be grouped into the following classes:

(1) Standard, which consists of Residential users located within the District or served by the District on an existing pipeline where pipeline or service facility extensions are not required and special design and/or engineering considerations are not necessary.

(2) Non-Standard, which consists of any Residential user whose service in not referenced in (1) above, and Developments, Commercial and Industrial users located within the District or served by the District and to which service to a non-residential structure is provided or existing standard users whose condition of service has caused their condition to be changed to Non-Standard per Section E.5.

(B) The intent of the billing is to assess water charges in such a manner that each class of users generally pays its share of debt service and operation and maintenance expenses for water service. The District may create additional classes of users in the future at its discretion.

(C) All classes of users may be grouped into sub-classes according to the meter size provided to their residence and/or commercial/Industrial establishment.

2. Service Investigation Fee

The District shall conduct a service investigation for each service application submitted to the District. An initial determination shall be made by the District as to whether the request is for standard or non-standard service. An investigation shall then be conducted by the District and the results reported under the following terms:

(A) Standard Service Requests. All standard service requests shall be investigated with a charge based on all applicable costs for providing service and shall be quoted in writing to the applicant within ten (10) working days of application. Applicant shall pay a fee which is dependent and determined by the depth of the study required as well as an administration fee due at time of submitting an application. Quote will contain investigation/Engineering fee and time to complete study.

(B) Non-Standard Service Requests. All non-standard service requests shall be investigated with a charge based on all applicable costs for providing service and shall be quoted in writing to the applicant within fifteen (15) working days of application. Applicant shall pay a fee of $50.00 administration fee at time of submitting application. Quote will contain investigation/Engineering fee and time to complete study.

(1) Providing cost estimates of the project;

(2) Presenting detailed plans and specifications as per final plat;

(3) Advertising and accepting bids for the project;

(4) Preparing a Non-Standard Service Contract between the District and applicant; and

(5) Providing other services as required by the District for such investigation.

The Service Investigation Fee is to cover the District' s expenses related to a service application, including but not limited to, District staff time and legal and engineering expenses. Any costs related to a non-standard service application that exceed the initial Service Investigation Fee paid will be billed to the Applicant with payment due within 30 days from the date of invoice. Any costs incurred by the District arising from the District's use of independent consultants (including, but not limited to engineers and attorneys acting on behalf of the District) to review, approve or prepare a non-standard service contract and any supporting plans and specification will be billed to the Applicant at the District's actual cost plus an administrative fee equal to 15% of such actual costs. All such fees, costs or expenses of the District will be due and payable by the Applicant within 30 days following the District's date of invoice.

3. Deposits

(A) Initial Payment and Amount. At the time an application for service is approved, the applicant shall pay a Deposit to be held by the District, without interest, until settlement of the customer's final bill. The Deposit will be used to offset unpaid charges or bills.

(1) Residential Service Applicants.

(a) The Deposit for residential water service connection is $300.00 for each service unit.

(b) The Deposit for residential wastewater service connection is $100.00 for each service unit.

(2) Commercial and Nonresidential Service Applicants. The Deposits for commercial and nonresidential water and wastewater service, including Master Metered Accounts, shall be based on the equivalent to a residential water service connection or meter equivalent as determined by the District.

(B) Commercial and Nonresidential Customers. If actual monthly billings of a commercial or nonresidential customer are more than twice the amount of the estimated billings at the time service was established, a new deposit amount may be calculated and an additional deposit may be required to be made within thirty (30) days after the issuance of written notice.

(C) Re-establishment of Deposit. Every service applicant who has previously been a customer of the District whose service has been discontinued for nonpayment of bills, meter tampering, bypassing of meter or failure to comply with applicable state regulations or regulations of the District shall be required, before service is resumed, to pay all amounts due the District or execute a deferred payment agreement, if offered by the District, and shall be required to pay a deposit if the District does not currently have a deposit from the customer.

(D) Refund of Deposit. If service is not connected, or after disconnection of service, the District shall refund the Landowner's deposit, if any, within 45 days provided the customer has given the District written notice of a forwarding address and after the entire balance has been satisfied.. All requests for Deposit refunds shall be made in writing and must be delivered to the District within ninety (90) days of termination of service. In the event that an outstanding balance exists, the District shall attempt to collect the outstanding balance by all lawful means available.

(E) Transfer of Service. A transfer of service from one service location to another within the District's service area shall not be deemed a disconnection within the meaning of this subsection, and no additional deposit may be required unless permitted by this section. However, it is the Landowner's responsibility to notify the District, in writing, should the property be sold/transferred to another owner. Any transfer of service shall be instigated by the Owner, in writing.

4. Easement Fee

When the District determines that private way utility easements and/or easements for facility sites are necessary to provide service to an applicant, the applicant shall be required to secure such easements on behalf of the District or pay all costs incurred by the District to validate, clear and obtain such easements, including but not limited to legal fees and court costs, in addition to tap fees otherwise required pursuant to the provisions of these rules and Regulations. [*See* Sections E.2(c)(2) and F.7(G)].

5. Connection Fee

The District shall charge a Connection Fee for water service as follows:

(A) Standard Service:

(1) The Water Connection Fee for standard water service is $2500.00 Impact or Connection Fee plus $700.00 installation fee and shall include one 5/8 x 3/4 meter, all labor, materials for construction, installation, or inspection of a tap or connection to the District's water system, including all necessary service line and meter. The Impact or Connection Fees are assessed on a per LUE (Living Unit Equivalent) bases. One (1) LUE = 298 gallons per day of demand. The Water Connection Fee for water service through a meter larger than 5/8 x 3/4 meter will be increased by the multiples of the meter equivalents stated herein. For example, the water connection for a one inch (1") meter will be 2.5 x $2500.00 or $6250 plus $700 installation fee and any additional charges for larger meter. In regards to a 5/8 x 3/4 meter, if services have been previously paid for (Impact Fee and Meter Installation) and exist (meter box and an active CCSUD service line to the property) the cost to install a meter will be $350. If no services exist and/or were not previously paid for, then the meter installation fee remains at $700.

(2) The Wastewater Capacity Fee for standard wastewater service (1 ½ or 2 inch line) is $2,500.00 plus the actual costs of all labor, materials for construction, installation, or inspection of a tap or connection to the District's wastewater collection system unless otherwise negotiated in a NSSA.

(3) In addition to the charges assessed herein, the District may charge the applicant for any extraordinary expenses including but not limited to expenses such as, the cost of water meters larger than 5/8 x 3/4 , road bores, street crossings, line extensions and system improvements and pipeline relocations under Section E.2(c)(6) of these rules and Regulations.

(B) Non-Standard Service.

(1) The Connection Fee for non-standard water service which, for the purpose of this section, is defined to be retail water service by the District to land that is deemed as Non-Standard by the District as described in Sec.G.1.A.(1) or being developed pursuant to the Texas Local Government Code that at the time of platting was not being provided with water service by the District or any Commercial or Industrial customer, shall be $2,500 for each standard water service equivalent connection and plus $700 for each meter installation for Development Projects, or as determined by the District based on all relevant factors including but not limited to the supply, pumping, storage and treatment capacity required for the Development compared to the amount of unrestricted capacity available in the District's system.

(2) The Wastewater Capacity Fee for non-standard wastewater service to each single family residence situated in an area developed or being developed for single family residential use that at the time of platting was not being provided with wastewater service by the District, shall be: Service Line Size Capacity Fee 1 ½" or 2" $2500 determined by the General Manager, based on all relevant factors including but not limited to the supply, pumping, storage and treatment capacity required for the Development compared to the amount of unrestricted capacity available in the District's system unless otherwise negotiated in a NSSA.

(3) Prior to the installation of any facilities to which Non Standard Connection Fees will apply, the applicant shall execute a non-standard service agreement with the District.

6. Monthly Charges

(A) Water Service. The District shall assess the following monthly charges for water service:

(1) Base Rate. The District's Base Rate for water service through a standard water meter is $41.21 per month. [The Base Rate is that portion of a customer's monthly bill which is paid for the opportunity of receiving utility service, excluding standby fees and reserved service charges, which does not vary due to changes in service consumption.] The standard 5/8" x 3/4" meter (as per American Water Works Association maximum continuous flow specifications) is used as a base multiplier for the Base Rate amount. Therefore, a customer's Base Rate charge is based on the number of 5/8" x 3/4" meters equivalent to the size of that customer's meter. The District's monthly Base Rates for water service and meter size equivalents are as follows:

(2)

METER SIZE	METER EQUIVALENTS	MONTHLY RATE
5/8" x 3/4" (standard)	1.0	$41.21
3/4" x 3/4"	1.5	$61.32
1"	2.5	$101.53
1½"	5.0	$202.05
2"	8.0	$322.68
3"	16	$644.34
4"	25	$1,006.22
6"	50	$2011.43

(2) Gallonage Charge. In addition to the Base Rate, customers with meters smaller than 2", shall be assessed a Gallonage Charge at the following rates for water usage during any one billing period:

1 to 5000 gallons	$5.09 per thousand gallons
5000.1 to 10000 gallons	$5.60 per thousand gallons
10000.1 to 20000 gallons	$6.66 per thousand gallons
20000.1 to 50000 gallons	$9.00 per thousand gallons
50000.1 to 70000 gallons	$11.50 per thousand gallons
More than 70000 gallons	$12.00 per thousand gallons

(B) Wastewater Service. Refer to Appendix C for Monthly Base and Usage Service Rates. *See* named Development for rate information.

(C) Reserved Service Charge. The District may assess a monthly Reserved Service Charge for each active and inactive account at a specific location for which a meter has not been installed or but for which the District and an applicant have or have previously entered into a

service agreement or Non-Standard Service Contract. This monthly charge generally shall be based on the District's fixed costs to service the applicant's dedicated facilities on a per service unit basis. This charge reserves service to the applicant's real property designated to receive service.

(D) Regulatory Assessment. In accordance with TCEQ regulations, the District shall collect from each customer a regulatory assessment equal to 0.5% of the monthly charges for water and wastewater service. [*See* 30 TAC § 291.76(d)(3)].

(E) Credit/Debit Card and/or ACH Payment Fee. All customers who use a credit/debit card, regardless of whether one time or a recurring auto-payment and/or any ACH payment as well, online or through the IVR to pay CCSUD will be subject to a convenience fee charged by the processing merchant. This fee will be solely the customers' responsibility and non-refundable by CCSUD. Any person that does not have or is not establishing an account with CCSUD, using a credit/debit card to pay for services or fees with CCSUD will be subject to a convenience fee charged directly by CCSUD for processing the credit/debit card payment per Texas State Code Sec. 49.2121.

(F) CRWA Bond Fee. $4.35 per customer account will be assessed to pay the bond debts the District is responsible for paying to the Canyon Regional Water Authority for our long term water.

(G) R&R Depreciation Fee. $6.95 per customer account will be assessed to pay for repair and replacement of assets of the District.

(H) Texas Water Development Board (TWDB) Bonds Fee. $5.00 per customer account will be assessed to pay the bond debts the District is responsible for paying to the TWDB for water system improvements and upgrades.

(I) Texas Commission on Environmental Quality (TCEQ) Regulatory Compliance Fee. $1.32 per customer account will be assessed to pay for costs incurred by the District to comply with TCEQ regulations and testing requirements.

7. Standby Fee

The Standby Fee is a monthly charge imposed on undeveloped property (a tract, lot or reserve in the District to which no water or wastewater connections have been made and for which water or wastewater facilities and services are available.). Upon adoption by the Board of Directors and approval by the Public Utility Commission, the District may charge a Standby Fee to owners of undeveloped property.

8. Late Payment Fee/Payment Arrangement Fee

A charge of $20.00 or 15.0%, whichever is greater, shall be applied to past due balances, if any, on each customer's monthly statement.

When a payment agreement is agreed upon, the last fees cease, and there will be a $10 a month fee till account is current.

9. Returned Check Fee

In the event a check, draft, or any other similar instrument is given by any person for payment of services provided for in these rules and Regulations, and the instrument is returned by the bank or other similar institution as insufficient or non-negotiable for any reason, the account for which the instrument was issued shall be assessed a return check charge of $30.00. [*See* Appendix A, Form A-06].

10. Service Trip Fee

The District may charge a Service Trip Fee of $125.00 for any service call or trip to a customer's tap as a result of a request by the customer or tenant, unless the service call concerns damage to District or customer equipment or facilities, or for the purpose of disconnecting or collecting payment for services.

11. Equipment Damage Fee

The District shall charge for all labor, material, equipment, and all other actual costs necessary to repair or replace all equipment damaged due to negligence, meter tampering or bypassing, reconnecting service without authority or other service diversion, or the discharge of wastes which the District's wastewater system cannot properly treat. The utility may charge for all actual costs necessary to correct service diversion or unauthorized taps where there is no equipment damage, including incidents where service is reconnected without authority. An itemized bill of such charges shall be provided to the customer. In cases of meter tampering or service diversion, the District may disconnect the service of a customer refusing to pay damage charges. [*See* 30 TAC § 291.87(n)].

12. Customer History Report Fee

A fee of $10.00 shall be charged to provide a copy of the customer's record of past water purchases in response to a customer's request for such a record.

13. Meter Test Fee

The District shall test a customer's meter upon written request of the customer and a Service Trip Fee of $125.00 plus actual test charges shall be imposed on the affected account if the meter is determined to be within the accuracy limits per AWWA Standards and there will be no charge if it is found to be inaccurate.

14. Meter Relocation Fee

The fee for moving a meter from one location to another under the terms of Section E.24 shall be the actual costs incurred by the District plus administrative charges, or a minimum fee of $150.00.

15. Temporary Service Charges

A non-refundable fee of $300.00 shall be charged plus actual installation charges, if any for temporary water service (usually via a Fire Hydrant Meter issued to a contractor). Applicants shall also pay water rates defined in Section 6. (A.) (2) above until the initial $300 has been met and billed for any additional usage thereafter as well as any other applicable fees or charges set forth in these rules and Regulations.

16. Non-Disclosure Fee

To the extent allowed by law, a fee of $5.00 may be assessed to any customer requesting in writing that personal information under the terms of these rules and Regulations not be disclosed to the public.

17. Information Disclosure Fee

All public information except that which has been individually requested as confidential shall be available to the public for a fee to be determined by the District based on the level of service and costs to provide such information, but not to be inconsistent with the terms of the Texas Publication Information Act: Chapter 552, Texas Government Code.

18. Transfer Fee

The District shall charge a Transfer Fee of $50.00 when applicable to cover administrative costs and the cost of recording easements in the land records of the county. Applicants obtaining service due to Transfer, Merger or Acquisition of CCN Territory from an adjoining public utility's CCN shall not be charged a deposit upon the approval by the appropriate state agency of such Sale, Transfer or Merger (STM). No deposit or transfer fee shall apply as long as the account is and remains in good credit standing. However, should the account go into default for any reason and/or should service to the account be discontinued due to non-payment of water charges, the account must complete a new service application and pay all customer deposit fees in order to reinstate service to the property.

19. Franchise Fee Assessment

A fee as determined and contractually agreed upon by and between the District and the municipality and/or other government entities empowered to do so, of the amount billed for water service will be assessed each customer whose meter is located inside the corporate limits of a municipality that imposes a franchise tax on the District.

20. Additional Assessments

In the event any federal, state or local government imposes on the District a "per meter" fee or an assessment based on a percent of water/wastewater charges, this fee or assessment will be billed and collected as a "pass through" charge to the customer.

21. Other Fees

(a) All services outside the normal scope of utility operations that the District may be compelled to provide at the request of a customer shall be charged to the recipient based on the cost of providing such service.

(b) If an existing customer subdivides its property or otherwise transfers a portion of the customer's property to another, whether according to an approved plat or otherwise, the customer must notify the District. If the transferee of such property seeks service, the transferor customer shall pay all actual costs for the District to install a minimum 6" distribution line and road bore from the District's supply main if requested by the District. Customers failing to comply with this provision shall be subject to Disconnection with Notice under Section E.12.(A).

(c) If the District determines that an applicant's property is subdivided or otherwise transferred to the applicant from a single property tract within five years prior to making a standard service connection request, whether according to an approved plat or otherwise, the applicant must pay all actual costs for the District to install a minimum 6" distribution line and road bore from the District's supply main if requested by the District as a condition for standard service.

22. Voluntary Surrender Fee

The District shall charge a Voluntary Surrender Fee of $100.00 to cover administrative costs.

23. Reconnect Fee

The District shall charge a Reconnect Fee of $150.00.

24. Customer Service Inspection Fee

The District shall charge a Customer Service Inspection Fee of $50.00 to cover inspection costs.

25. Backflow Prevention Assembly Test Fee

The District may charge a Backflow Prevention Assembly Test Fee of $125.00 to cover testing fees which are required annually. However, should the customer choose to have the Backflow Prevention Assembly Test performed as an annual, routine part of its service, then Crystal Clear will do so and include a Fee of $60 on their monthly invoice. The District allows the Customer to purchase private inspections from qualified sources.

In the event that a customer has a new meter installed, CCSUD may put in a shut off valve at the time of connection directly at the customer's side of the meter at no additional charge to the customer. This is a one-time occurrence. At any time that the valve quits working or becomes damaged, any further installation/replacement of this valve is solely at the customer's cost and responsibility.

In the event that the customer calls CCSUD to turn off the water for a customer to repair a leak, CCSUD may waive the normal $125 service fee if the customer has a shut off valve installed

directly on their side of the meter. This is a one-time adjustment for this service and CCSUD must physically verify that the valve has been installed. At any time that the valve quits working or becomes damaged, any further installation/replacement of this valve is solely at the customer's cost and responsibility

If the customer touches the meter/meter box/CCSUD shut off or any other components of the meter equipment, and damage occurs, any costs associated with that damage are payable to CCSUD by the customer. These charges may be added to the customer's account and failure to pay the damages could result in disconnection of the customer's CCSUD provided services.

Installation of pressure reducers on the customer's side are solely the cost and responsibility of the customer.

SECTION H: WATER CONSERVATION PLAN

Water supply has always been a key issue in the development of Texas. In recent years, the growing population and economic development of North Central Texas has led to increasing demands for water. Additional supplies to meet higher demands will be expensive and difficult to develop. Therefore, it is important that we make efficient use of our existing supplies to minimize the amount of new resources needed.

Effective water conservation can postpone or reduce the need for development of new water supplies, minimize the associated environmental impacts, and reduce the high cost of water supply development. Nonetheless, to respond to the growing population of our area, the planning for new water resources must continue. Crystal Clear considers water conservation an integral part of this planning process.

Recognizing the need for efficient use of existing water supplies, the Texas Commission on Environmental Quality ("TCEQ") has announced guidelines and requirements governing the development of water conservation plans for Public Water Suppliers. Crystal Clear has prepared this Water Conservation Plan (the "Plan") following the TCEQ guidelines, recommendations from UTRWD and certain best management practices by the TWDB.

The objectives of this Plan include:

- To reduce water consumption from levels that would prevail without conservation efforts;
- To reduce the loss and waste of water, as evidenced by per capita use;
- To improve efficiency in the use of water;
- To extend the adequacy of current water supplies by reducing the pace of per capita annual growth and demand water.

1.2 Texas Commission on Environmental Quality Rules

TCEQ rules governing the development of water conservation plans for Public Water Suppliers are contained in Title 30, Part 1, Chapter 288, Subchapter A, and Rule 288.2 of the Texas Administrative Code. Copies of these rules are included in Appendix A. The rules define a water conservation plan as:

> "A strategy or combination of strategies for reducing the volume of water withdrawn from a water supply source, for reducing the loss or waste of water, for maintaining or improving the efficiency in the use of water, for increasing the recycling and reuse of water, and for preventing the pollution of water."

(A) Minimum Water Conservation Plan Requirements: The minimum requirements for water conservation plans for municipal uses by Public Water Suppliers required by TCEQ are summarized below:

Utility Profile: Includes information regarding population and customer data, water use data, water supply system data, and wastewater system data. (Section 2.0)

Goals: Specific quantified five-year and ten-year targets for water savings to include goals for water loss programs and goals for municipal use, in gallons per capita per day (GPCD). The goals established by a Public Water Supplier are not enforceable under this subparagraph. (Section 3.0)

Accurate Metering Devices: TCEQ requires that metering devices have an accuracy of plus or minus five percent (5%) for measuring water diverted from the source of supply. (Section 4.1)

Universal Metering, Testing, Repair and Replacement: TCEQ requires that there be a program for universal metering of both customer and public uses of water, for meter testing and repair, and for periodic meter replacement. (Section 4.2)

Determination and Control of Unaccounted-for Water: Regulations require specific measures to determine and control unaccounted-for water. The measures may include periodic visual inspections along distribution pipelines, periodic audits of the water system for illegal connections or abandoned services. (Section 4.3)

Continuing Public Education Program: A continuing public education and information program regarding water conservation is required as part of the Plan. (Section 4.4)

Non-Promotional Water Rate Structure: Chapter 288 requires a water rate structure that is not "promotional"; that is, rates that discourage waste and excessive use of water such as increasing block rate instead of volume discounts. (Section 4.5)

Reservoir Systems Operational Plan: If applicable, this requirement is to provide a coordinated operational structure for operation of reservoirs owned by the water supply entity within a common watershed or river basin in order to optimize available water supplies.

Coordination with Regional Water Planning Group: Crystal Clear SUD is required to document that the Plan has been coordinated with the Regional Water Planning Group to insure consistency with the appropriate approved regional water plan. (Section 7.0)

Means of Implementation and Enforcement: The regulations require a strategy for implementing and enforcing the provisions of this Plan, as evidenced by an ordinance, resolution, or tariff, and a description of the authority by which the Plan is enforced. (Section 8.0)

(B) Additional Requirements for Larger Public Water Suppliers: Water conservation plans covering municipal uses by Public Water Suppliers that: (1) currently serve a population of 5,000 or more; or (2) a projected population of 5,000 or more within ten (10) years from the effective date of this Plan; or, (3) provide potable water service to 3,300 or more connections, are required to include the following additional strategies.

Program for Leak Detection & Repair, and Water Loss Accounting: The Plan must include a description of a program of leak detection and repair, and water loss accounting for the water transmission, delivery, and distribution system. (Section 5.1)

Record Management System: The Plan must include a record management system to record water pumped, water delivered, water sold and water lost, which allows for the

desegregation of water sold and used into user classes (residential, commercial, public and institutional, and industrial). (Section 5.2)

Wholesale Customer Requirements: If applicable, the Plan must include a requirement that every water supply contract entered into or renewed after official adoption of the water conservation plan, and including any contract extension, that each successive wholesale customer develop and implement a water conservation plan or water conservation measures using the applicable elements of Title 30 TAC Chapter 288. (Section 5.3)

(C) Additional Water Conservation Program Strategies: Landscape Water Management Measures are a strategy that can be used to reduce discretionary water use during summer months. It is an **optional** strategy within the TCEQ regulations. However, it is recommended that Crystal Clear implement a landscape water management ordinance as part of the Plan.

Landscape Water Management Measures: These regulations are minimal measures to reduce waste in landscape irrigation and peak water demand within the water distribution system. (Section 6.1)

Crystal Clear may also incorporate any or all of the following additional conservation strategies, **which are optional**, as needed to achieve the conservation goals stated in this Plan:

Adoption of ordinance, plumbing codes or rules requiring water-conserving fixtures (Section 6.3);

A program for replacement or retrofit of water-conserving plumbing fixtures in existing structures;

Reuse and/or recycling of wastewater and/or gray water (Section 6.2);

A program for pressure control and/or reduction in distribution system and/or customer connections;

A program for landscape water management (Section 6.1); or,

A method for monitoring the effectiveness and efficiency of the Plan.

This Plan sets forth a program of long-term measures under which Crystal Clear can improve the overall efficiency of water use and conserve its water resources. Short-term measures that respond to specific water management conditions (i.e., periods of drought, unusually high water demands, unforeseen equipment or system failure, or contamination of a water supply source) are provided in Crystal Clear's Drought Contingency Plan.

Crystal Clear reserves the right to update and/or amend the plan as needed.

Water Conservation & Drought Contingency Plan

Crystal Clear SUD
Crystal Clear WSC

Committed to Providing Clean, Safe Water for All Our Residents

2014

ADDRESS	PHONE	WEB
2370 FM 1979, San Marcos, TX 78666	(830) 372-1031	www.CrystalClearSUD.org

Table of Contents

CRYSTAL CLEAR

Introduction

Crystal Clear Water Supply Corporation/Special Utility District "Crystal Clear" is a Public Water System (PWS) in South Central Texas that provides water service to approximately 15,000 residents and 4,500 retail connections over 165 square miles in portions of Comal, Guadalupe, and Hays Counties. The service area extends across Interstate Highway 35 to the northwest and is bordered by Interstate Highway 10 to the south, State Highway 46 to the southwest, and the San Marcos River to the northeast. Crystal Clear is currently undergoing a transition from a Water Supply Corporation to a Special Utility District.

Crystal Clear primarily serves single-family residential units including the communities of Hunter, Kingsbury, Redwood, and Zorn as well as portions of the extra territorial jurisdictions and within the city limits of the Cities of New Braunfels, San Marcos, Seguin, and Staples. Currently, 82.5% of the service area is located in Guadalupe County, 9.0% is in Hays County, and 8.5% is in Comal County. Crystal Clear has territory within the boundaries of the Edwards Aquifer Authority and the Guadalupe County Groundwater Conservation District. The entire service area is located in the Region L South Central Texas Regional Water Planning Group (SCTRWPG), which is administered by the Texas Water Development Board (TWDB).

Currently, Crystal Clear can use 4,073 acre-feet per year (AF/yr) of water supply from wells in the Edwards, Edwards/Uvalde and Carrizo aquifers as well as water supply contracts with the Guadalupe-Blanco River Authority (GBRA), Canyon Regional Water Authority (CRWA), and Springs Hill WSC. Additional water supply strategies include the development of groundwater in the Trinity and Wilcox aquifers.

Crystal Clear is also a member of the Hays Caldwell Public Utility Agency (PUA) owning a 10.3% share of the production dedicated and owned by CRWA in the Hays Caldwell PUA Phase 1 and 2 projects scheduled for the years 2022-2025 and 2030-2035 respectively. The Hays Caldwell PUA projects are located within the Gonzalez County Underground Water Conservation

District (UWCD) boundaries and are specifically recommended for the District by the SCTRWPG's approved 2011 Regional Water Plan.

The SCTRWPG 2011 Regional Water Plan projects the population of the Crystal Clear's service area to increase to 32,804 by 2030 and to 55,673 by the year 2060. The corresponding projected total water demands are 3,344 AF/yr and 5,551 AF/yr respectively. The Regional Water Plan also recommends additional water supply from the Wilcox aquifer and CRWA as well as other sources including municipal water conservation.

WATER CONSERVATION PLAN

A Water Conservation Plan is a combination of strategies for:

- Reducing the volume of water withdrawn from a water supply source
- Reducing the loss or waste of water
- Maintaining or improving the efficiency in the use of water
- Increasing the recycling and reuse of water
- Preventing the pollution of water

Crystal Clear recognizes that the amount of water available to supply its water utility customers may be limited and subject to depletion during periods of extended drought. Representing the best interests of its customers, Crystal Clear deems it expedient and necessary to establish certain rules and policies for the ongoing conservation of water and the orderly and efficient management of limited water supplies during drought and other water supply emergencies.

Statutory & Rule Requirements

Texas Water Code §13.146.

WATER CONSERVATION PLAN. The commission (TCEQ) shall require a retail public utility that provides potable water service to 3,300 or more connections to submit to the executive administrator of the board (TWDB) a water conservation plan based on specific targets and goals developed by the retail public utility and using appropriate best management practices, as defined by Section 11.002, or other water conservation strategies.

Title 30 Texas Administrative Code § 288.30(5)(A)

For retail public water suppliers providing water service to 3,300 or more connections, the drought contingency plan must be submitted to the executive director (TCEQ) not later than May 1, 2005. Thereafter, the retail public water suppliers providing water service to 3,300 or more connections shall submit the next revision of the plan not later than May 1, 2009, and every five years after that date to coincide with the regional water planning group.

Utility Profile

A completed "TWDB Utility Profile for Retail Water Supplier" for Crystal Clear is attached in Appendix A.

Certificate of Convenience and Neccesity No.	10297
Public Water Supply Nos.	0940015, 0940017
Groundwater Conservation Districts	Edward Aquifer Authority, Guadalupe Co. GCD, Gonzales Co. UWCD
Regional Water Planning Group	South Central Texas (Region L)
Counties	Comal, Guadalupe, Hays
Service Area	165 Square Miles
Water Sources	Edwards Aquifer, Trinity Aquifer, Carrizo Aquifer, Wilcox Aquifer, Guadalupe River
System Capacity	2.5 Million Gallons per Day (MGD)
Storage Capacity	4.118 Million Gallons (MG) Ground, 1.15 MG Elevated

Population & Customer Use Data

Crystal Clear serves retail customers in portions of Comal, Guadalupe, and Hays counties. The area is located on the northern edge of the south Texas plains and is characterized by an average of 32 inches of rain annually. Land use, historically predominated by agriculture is increasingly developing into rural and urbanized residential uses.

Based upon the TWDB 2012 Water Use Survey, Crystal Clear has 4,617 retail service connections. The majority (approximately 2/3) of the connections (3,067) are in Guadalupe County. There are 960 connections in Hays County and 590 in Comal County. The distribution of service connections by county is shown below.

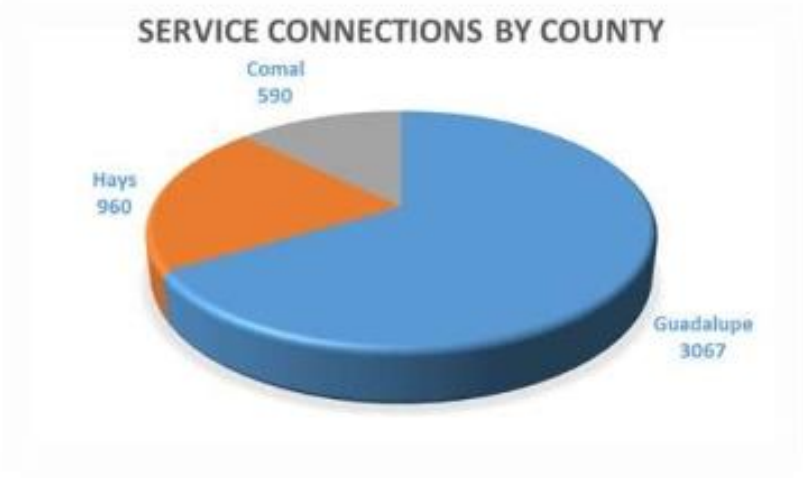

Due to the nature of the service area, identification of the actual population served can be challenging. With a service area located in portions of three counties, additional efforts are required to interpret United States Census data and county appraisal records. An independent population study was performed by the District in 2011 and concluded that the population for the entire service area was 14,932. Population projections in this Plan are calculated by estimating 3.0 people per residential connection.

CRYSTAL CLEAR

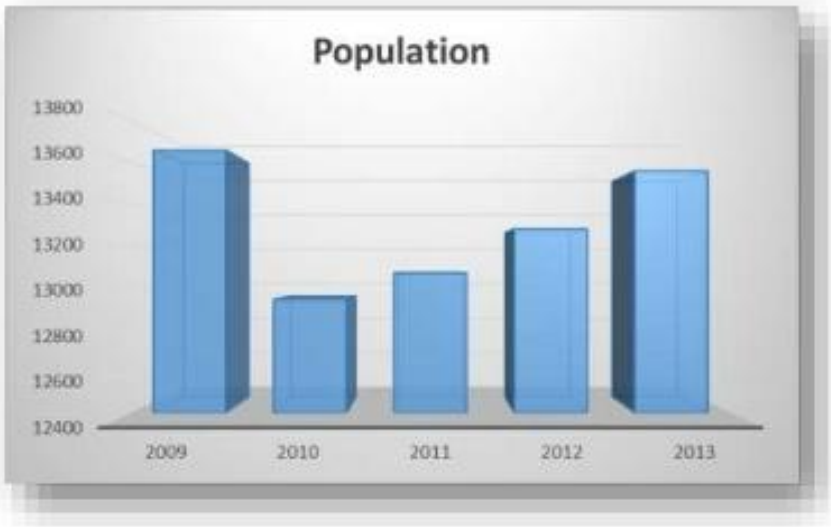

The population of Crystal Clear has fluctuated in recent years. The TWDB and Region L Water Planning Group population projections over the next 50 years, however, estimate that the Crystal Clear's population will nearly triple. TWDB and Region L Water Planning Group population projections are shown below.

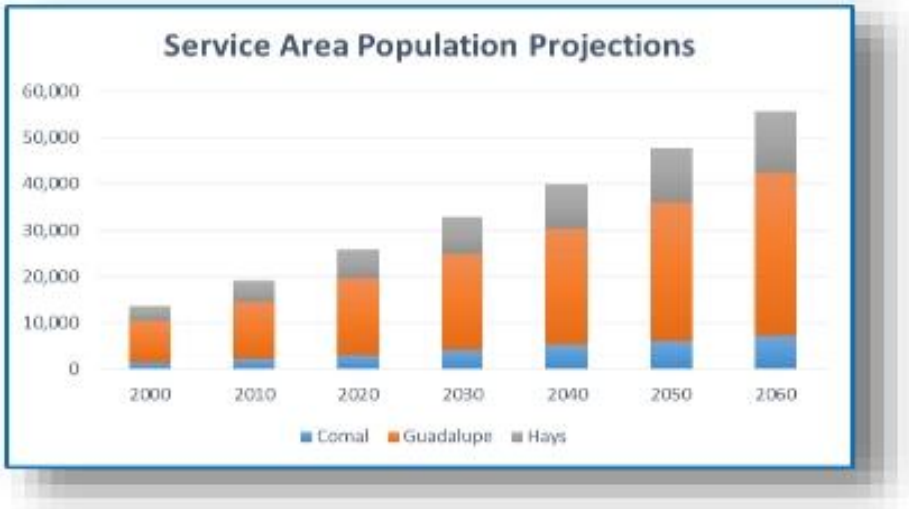

CRYSTAL CLEAR

The charts below show that the largest customer sector is residential and that most of the water is used by residential customers. Service is also provided to commercial and industrial users. The distribution of water-use sectors within Crystal Clear's service area and the distribution of water usage between the sectors is shown below. While commercial use represents 4% of connections, it represents 8% of water use; and while industrial use represents less than 1% of connections, it represents 2% of water use. Commercial and industrial connections have a higher per connection usage than residential connections.

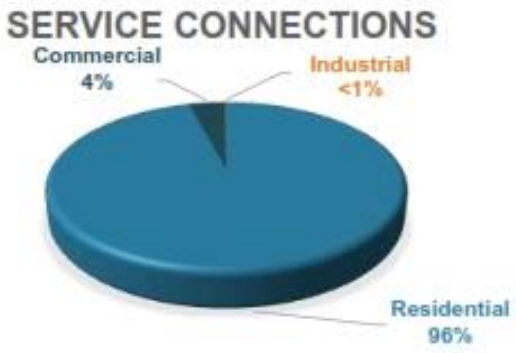

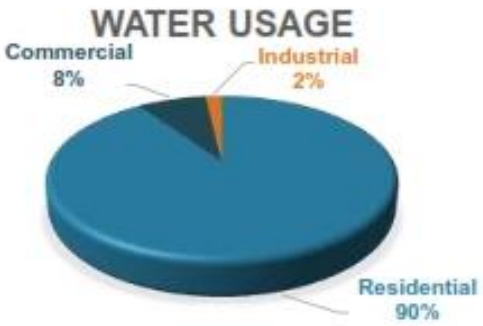

Water Conservation Goals

Per capita water use is generally expressed in gallons per customer per day (GPCD) and is the average amount of water used by each person in the population served by a water utility. Variable factors that can influence GPCD include the amount of non-residential water uses, the rate and type of customer growth, economics, climatic conditions, and demographics. For Crystal Clear residential GPCD is a more appropriate metric for understanding how much water each customer is actually using because it comprises 98% of customer use not including commercial, industrial, and institutional uses.

For the previous five years, the average total GPCD for the Crystal Clear was 122. Single-Family Residential use for the District was 95 GPCD. The previous five years of per capita water use are shown below.

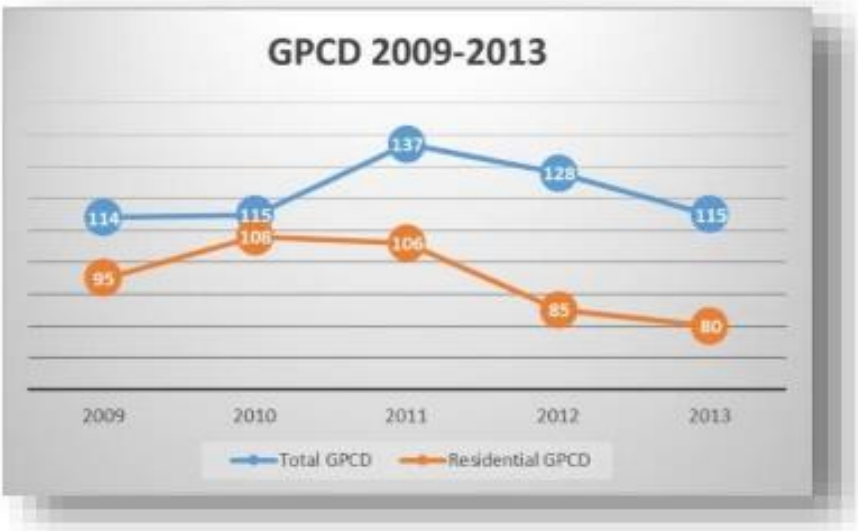

CRYSTAL CLEAR

Crystal Clear's five and ten year water conservation goals are based upon the Texas Water Conservation Implementation Task Force's recommendation of a reduction in per capita water use of 1% per year. Per capita usage and water loss goals are shown below.

The General Manager will assess the effectiveness of water conservation activities and the District's progress in achieving the stated goals on an annual basis.

Public Education (Conservation)

Crystal Clear conducts a program of ongoing public water conservation education that includes:

- Periodic distribution of water conservation brochures and information
- Provision of water conservation brochures and materials at the main office and other public places
- Informational presentations offered by Utility staff to local organizations, schools, and civic groups
- Information available to local newspaper, television, and radio outlets
- Water Conservation information posted on website
- Water conservation information provided to applicants for new service

Metering Devices

Crystal Clear meters 100% of the water used by residential, industrial, and commercial accounts. In 2013, the Crystal Clear completed a full meter replacement program exchanging old meters for smart meters. Meters are tested upon customer request. The diagram below describes the Crystal Clear's meter testing, repair, and replacement program.

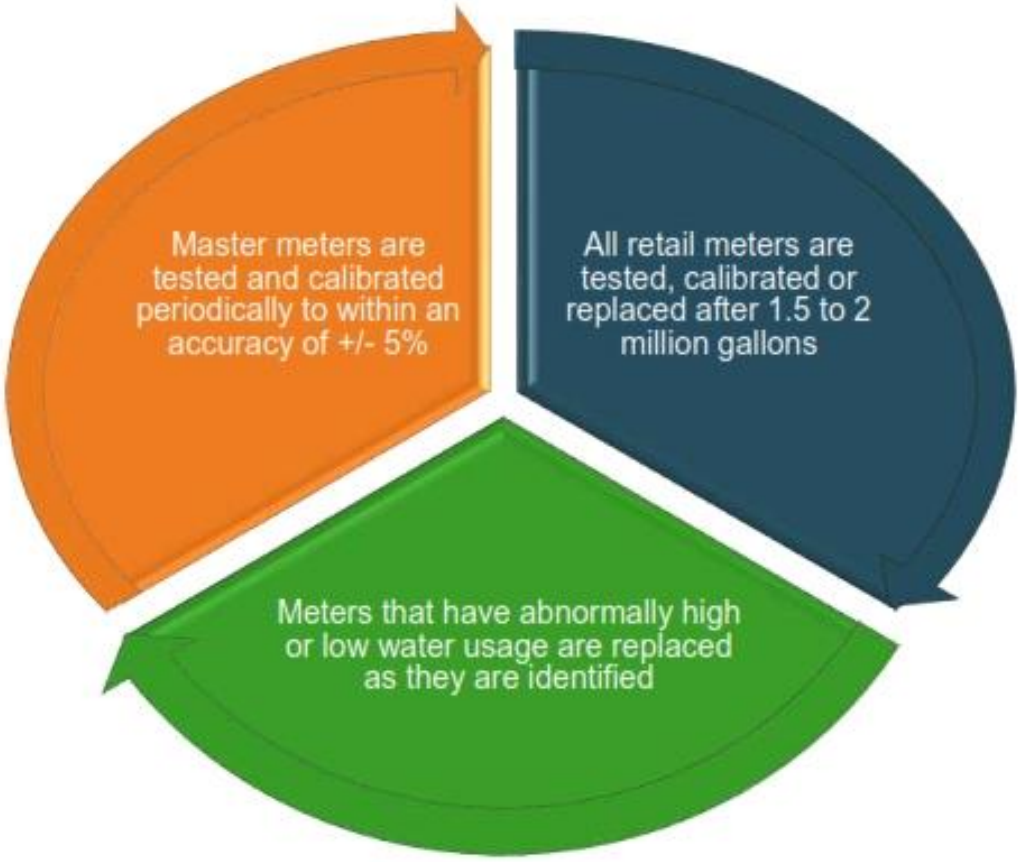

Water Loss

Crystal Clear maintains an ongoing program of leak detection and repair. In 2013, water loss for the District was calculated to be 25%. The long term goal is to maintain less than 15% water loss. The leak detection program for the District is shown below.

- Annual internal water audit measures water loss by comparing billed versus pumped water volumes.
- Abnormalities in water use are investigated by the District staff using leak detection equipment.
- Water lines found to have leaks are replaced as quickly as practical.
- Visual inspections are performed routinely by meter readers and District staff.
- Storage tanks are monitored and pressure is controlled by a SCADA system

The District currently has seven field technicians training to identify water leaks with the use of sonic leak detection equipment. The system is divided into 11 zones that, within a five year planning window, will be equipped with pressure meters. Cloud-based software will instantly detect pressure losses within a zone and alert utility staff to the presence of a leak. Using asset management software, Crystal Clear will be able to identify the location of problem areas to make repairs. Crystal Clear continues to explore new practices and technologies to minimize the loss of water.

Water Rates

Crystal Clear uses a cost based inclining block rate that discourages the excessive use of water. The residential base rate is $34.00. Six inclining usage blocks (tiers) are set up in increments of ten thousand gallons. The rates for each successive inclining block are designed to encourage the conservation of water by sending a strong price signal that charges incrementally higher rates per each increasing thousand gallons of water use.

Cross Connection Control

Crystal Clear maintains required cross connection control. Risk of backflow is generally reduced by taking steps to ensure that system pressures do not fall during periods of emergency repairs and by performing periodic customer inspections for cross connections. Facilities and structures determined to have a high public health hazard are required to install devices that prevent back-siphonage of nonpotable water from a loss of pressure in water lines.

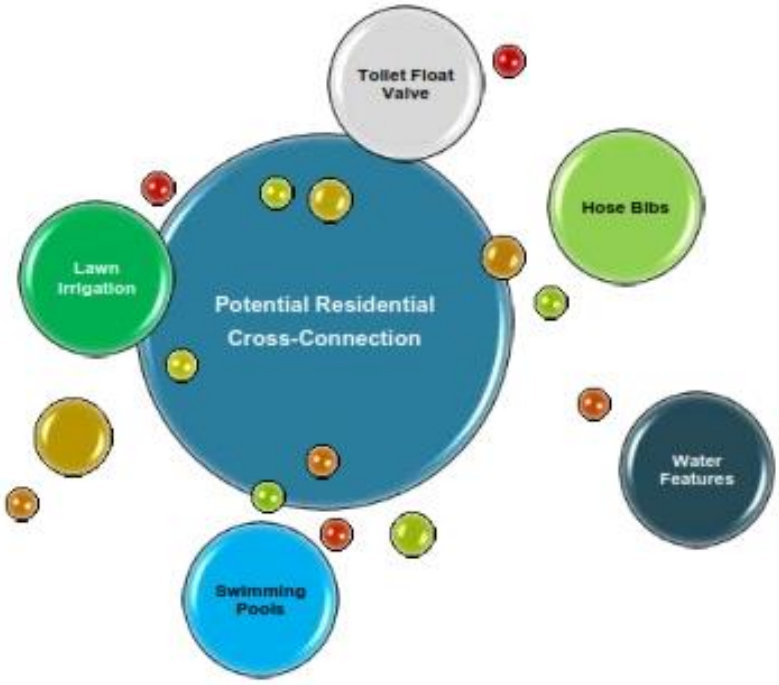

Plumbing Fixtures

The State of Texas has recently adopted more stringent water saving performance measures for plumbing fixtures, found in the Texas Health and Safety Code Chapter 372. The following maximum flow standards are subsequently listed in the Texas Administrative Code Title 30 Chapter 290 Subchapter G:

Customers in existing buildings that do not have water saving plumbing fixtures are encouraged through educational materials to retrofit their old plumbing fixtures with lower gallons per minute (gpm) or gallons per flush (gpf) standards. Recently, the District has participated in a showerhead exchange program in conjunction with a local plumbing supplier.

An increasing number of water efficient clothes and dish washing machines are now available that provide the same performance, but use less water. A water efficient home can save more than 20% of annual indoor water use. Crystal Clear currently administers a program to provide free showerheads and faucet aerators for its customers.

Discretionary Uses

The following uses of water are considered to be discretionary or non-essential:

* Commercial car washes using Best Management Practices that include recycling of water are exempt.

Water Waste

Water waste is prohibited at all times. Water waste is defined as:

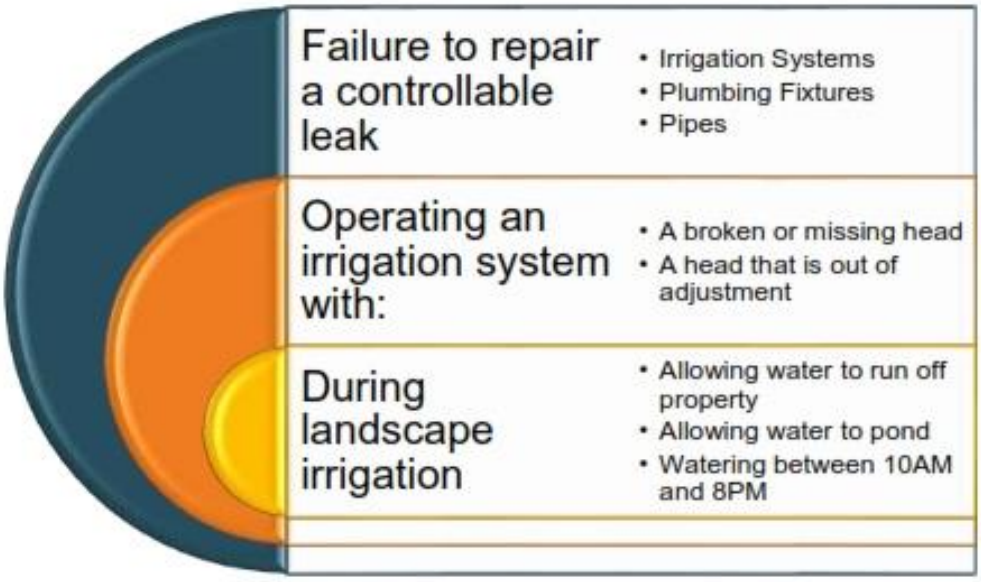

Each instance of a violation is a separate offense and may be punishable as described in the Enforcement section of this plan.

CRYSTAL CLEAR

DROUGHT CONTINGENCY PLAN

A strategy or combination of strategies for temporary supply and demand management responses to temporary and potentially recurring water supply shortages and other water supply emergencies.

Statutory & Rule Requirements

Texas Water Code, Sec. 11.1272. ADDITIONAL REQUIREMENT: DROUGHT CONTINGENCY PLANS FOR CERTAIN APPLICANTS AND WATER RIGHT HOLDERS.

The commission (TCEQ) shall by rule require wholesale and retail public water suppliers and irrigation districts to develop drought contingency plans consistent with the appropriate approved regional water plan to be implemented during periods of water shortages and drought.

Title 30 Texas Administrative Code, §288.30. REQUIRED SUBMITTALS.

For retail public water suppliers providing water service to 3,300 or more connections, the drought contingency plan must be submitted to the executive director (TCEQ) not later than May 1, 2005. Thereafter, the retail public water suppliers providing water service to 3,300 or more connections shall submit the next revision of the plan not later than May 1, 2009, and every five years after that date to coincide with the regional water planning group.

Declaration of Policy, Purpose, and Intent

In order to conserve the available water supply and protect the integrity of water supply facilities, with particular regard for domestic water use, sanitation, and fire protection, and to protect and preserve public health, welfare, and safety and minimize the adverse impacts of water supply shortage or other water supply emergency conditions, Crystal Clear hereby adopts the following regulations and restrictions on the delivery and consumption of water by Resolution.

Water uses regulated or prohibited under this Drought Contingency Plan are considered to be non-essential or discretionary and continuation of such uses during times of water shortage or other emergency water supply conditions are deemed to constitute a waste of water which subjects the offender(s) to penalties as defined in the Enforcement of Drought Contingency Plan section of this Plan.

Authorization

The Board of Directors and General Manager are hereby authorized and directed to implement the applicable provisions of this Plan upon determination that such implementation is necessary to protect public health, safety, and welfare. The Board of Directors and General Manager shall have the authority to initiate or terminate drought or other water supply emergency response measures as described in this Plan.

Application

The provisions of this Plan shall apply to all persons, customers, and property utilizing water provided by Crystal Clear. The terms "person" and "customer" as used in the Plan include individuals, corporations, partnerships, associations, and all other legal entities.

Public Involvement

Opportunity for the public to provide input into the preparation and maintenance of this Drought Contingency Plan continues to be provided by the following:

Mailing	2370 FM 1979, San Marcos, TX 78666
Telephone	(830) 372-1031
Website	CrystalClearSUD.org
Events	Periodic water related activities

Public Education (Drought)

Crystal Clear will periodically provide the public with information about this Drought Contingency Plan, including information and/or notification about the conditions under which each stage of the Plan is to be initiated or terminated and the drought response measures to be implemented in each stage. Water conservation tips and information will also be provided. This information will be provided by means of:

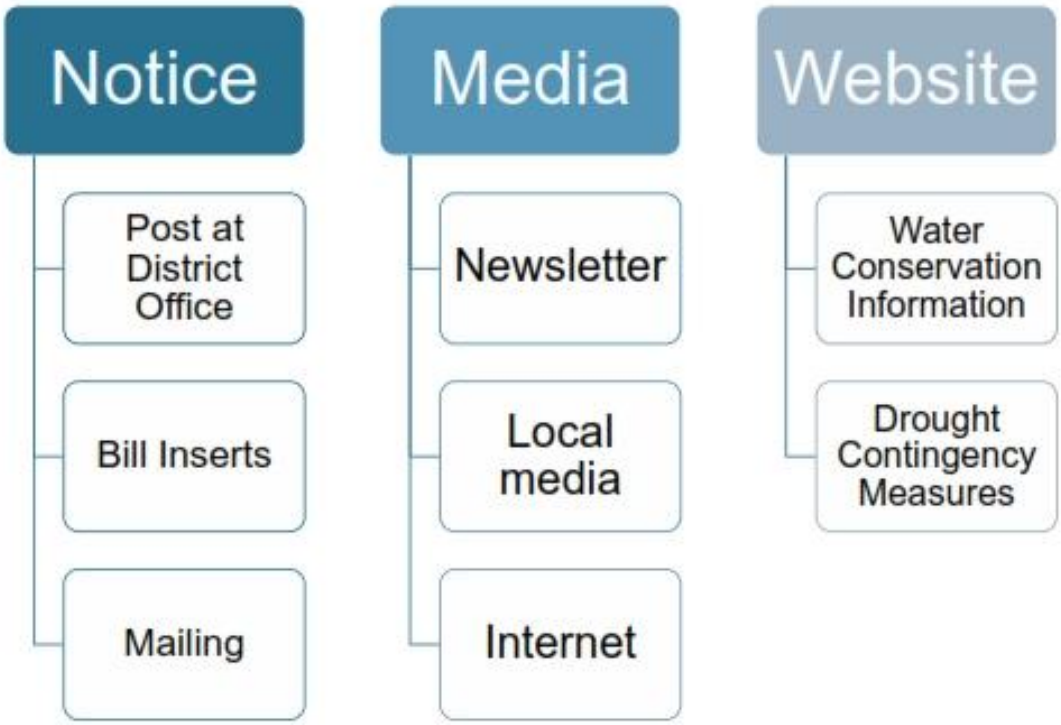

Supply Based Triggers

Crystal Clear obtains water from multiple sources. Each source has specific triggers and targets for water use reductions that apply. The figure below shows the targets for water use reductions for each water source. Stage 4 and Stage 5 reductions from CRWA and GBRA are variable, based upon a pro rata allocation of water between all CRWA and GBRA wholesale customers.

The triggering criteria for Crystal Clear are based upon the most restrictive targets from its multiple water sources.

Demand Based Trigger

When tank levels reach 60% of capacity, the supervisory control and data acquisition (SCADA) system sends an alert to the District and triggers an email/phone notification program to ask customers to reduce water usage.

Contamination Trigger

In the event of a contamination event, appropriate emergency procedures will be implemented and appropriate emergency response officials will be notified immediately. In the event of a backflow incident, loss of pressure, or an acute maximum contaminant level coliform violation, a "Boiled Water Notice" will be implemented as prescribed in Title 30 TAC Chapter 290.

System Outage Trigger

In the event of a catastrophic failure due to natural or man-made events, appropriate emergency procedures will be implemented and appropriate emergency response officials will be notified.

Alternative Sources

In the event of an emergency loss of water supply, the District will consider purchases of water by the truckload or in bottles for the health and public safety of the District's residents.

Response Stages

Crystal Clear will notify TCEQ when implementing or rescinding any stage of this plan. Use of water for landscape irrigation shall be only performed between midnight and 10AM and from 8PM to midnight. Water-use restrictions applicable to aesthetic water features and the washing of vehicles, structures, or impervious surfaces are applicable to each successively higher stage. Irrigation between 10AM and 8PM is considered water waste and is enforceable as a violation at all times. The Crystal Clear outdoor water-use schedule is as follows:

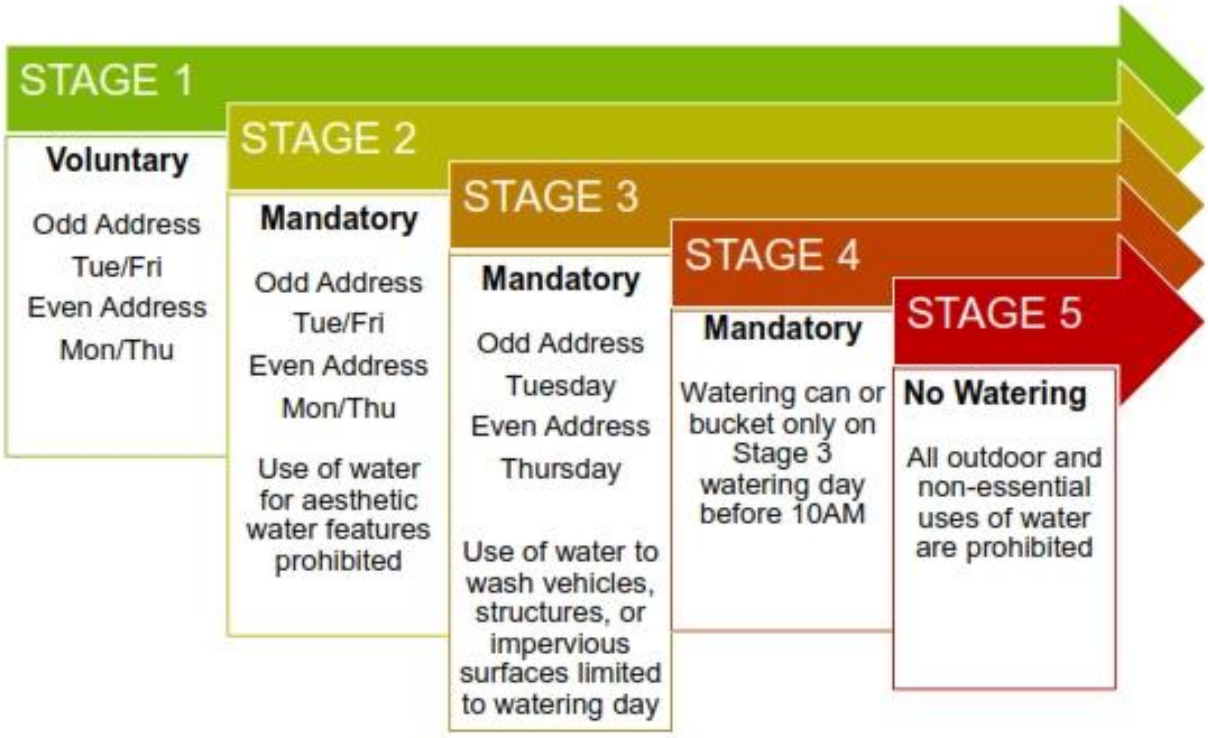

Variances

The General Manager or designee may, in writing, grant a temporary variance for existing water uses otherwise prohibited under this Plan if it is determined that failure to grant such variance would cause an emergency condition adversely affecting the health, sanitation, or fire protection for the public or the person requesting such variance, and if one or more of the following conditions are met:

1. Compliance with this Plan cannot be technically accomplished during the duration of the water supply shortage or other condition for which the Plan is in effect.

2. Alternative methods can be implemented which will achieve the same level of reduction in water use.

Persons requesting an exemption from the provisions of this Resolution shall file a petition for variance with Crystal Clear within five days after the Plan or a particular drought response stage has been invoked. All petitions for variances shall be reviewed by General Manager or designee, and shall include the following:

1. Name and address of the petitioner(s);
2. Purpose of water use;
3. Specific provision(s) of the Plan from which the petitioner is requesting relief;
4. Detailed statement as to how the specific provision of the Plan adversely affects the petitioner or what damage or harm will occur to the petitioner or others if petitioner complies with this Resolution;
5. Description of the relief requested;
6. Period of time for which the variance is sought;
7. Alternative water use restrictions or other measures the petitioner is taking or proposes to take to meet the intent of this Plan and the compliance date; and
8. Other pertinent information.

Resolution

RESOLUTION FOR ADOPTION OF A WATER CONSERVATION & DROUGHT CONTINGENCY PLAN

RESOLUTION NO. _____

A RESOLUTION OF THE BOARD OF DIRECTORS OF CRYSTAL CLEAR SPECIAL UTILITY DISTRICT ADOPTING A WATER CONSERVATION & DROUGHT CONTINGENCY PLAN.

WHEREAS, the Board recognizes that the amount of water available to the Crystal Clear Special Utility District and its water utility customers is limited and subject to depletion during periods of extended drought;

WHEREAS, the Board recognizes that natural limitations due to drought conditions and other acts of God cannot guarantee an uninterrupted water supply for all purposes;

WHEREAS, the Water Code and the regulations of the Texas Commission on Environmental Quality (the "Commission") and the Texas Water Development Board (the "Board") require that the District adopt a water conservation and drought contingency plan;

WHEREAS, as authorized under law, and in the best interests of the customers of the Crystal Clear Special Utility District, the Board deems it expedient and necessary to establish certain rules and policies for the orderly and efficient management of limited water supplies during drought and other water supply emergencies;

NOW THEREFORE, BE IT RESOLVED BY THE BOARD OF DIRECTORS OF THE CRYSTAL CLEAR SPECIAL UTILITY DISTRICT:

SECTION 1. That the Water Conservation and Drought Contingency Plan attached hereto as Exhibit "A" and made part hereof for all purposes be, and the same is hereby, adopted as the official policy of the Crystal Clear Special Utility District.

SECTION 2. That the General Manager is hereby directed to implement, administer, and enforce the Water Conservation & Drought Contingency Plan.

SECTION 3. That this resolution shall take effect immediately upon its passage.

DULY PASSED BY THE BOARD OF DIRECTORS OF THE CCSUD, ON THIS 17 day of April, 2014.

President, Board of Directors Dennis Kraehan

ATTESTED TO:

Secretary, Board of Directors

Coordination with Region L Planning Group

The service area of the Crystal Clear is located within the South Central Texas (Region L) Regional Water Planning Group and the District will provide a copy of this Plan to the Region L Planning Group at:

San Antonio River Authority
P.O. Box 839980
San Antonio, TX 78238-9980

Enforcement

First Violation

- The customer will be notified by written notice of their specific violation.
- Crystal Clear may assess a penalty.

Second Violation

- The customer may be assessed a penalty.
- Crystal Clear may install a flow restricting device for seven (7) days.
- Crystal Clear may charge the customer for the cost of installing and removing the flow restricting device.

Third Violation

- Crystal Clear may discontinue service at the meter for a period of seven (7) days.
- The normal reconnect fee of Crystal Clear will apply for restoration of service.

RESOLUTION FOR ADOPTION OF A WATER CONSERVATION & DROUGHT CONTINGENCY PLAN

RESOLUTION NO. _____

A RESOLUTION OF THE BOARD OF DIRECTORS OF CRYSTAL CLEAR WATER SUPPLY CORPORATION ADOPTING A WATER CONSERVATION & DROUGHT CONTINGENCY PLAN.

WHEREAS, the Board recognizes that the amount of water available to the Crystal Clear Water Supply Corporation and its water utility customers is limited and subject to depletion during periods of extended drought;

WHEREAS, the Board recognizes that natural limitations due to drought conditions and other acts of God cannot guarantee an uninterrupted water supply for all purposes;

WHEREAS, the Water Code and the regulations of the Texas Commission on Environmental Quality (the "Commission") and the Texas Water Development Board (the "Board") require that the District adopt a water conservation and drought contingency plan;

WHEREAS, as authorized under law, and in the best interests of the customers of the Crystal Clear Water Supply Corporation, the Board deems it expedient and necessary to establish certain rules and policies for the orderly and efficient management of limited water supplies during drought and other water supply emergencies;

NOW THEREFORE, BE IT RESOLVED BY THE BOARD OF DIRECTORS OF THE CRYSTAL CLEAR WATER SUPPLY CORPORATION:

SECTION 1. That the Water Conservation and Drought Contingency Plan attached hereto as Exhibit "A" and made part hereof for all purposes be, and the same is hereby, adopted as the official policy of the Crystal Clear Water Supply Corporation.

SECTION 2. That the General Manager is hereby directed to implement, administer, and enforce the Water Conservation & Drought Contingency Plan.

SECTION 3. That this resolution shall take effect immediately upon its passage.

DULY PASSED BY THE BOARD OF DIRECTORS OF THE ~~CCWSC~~ CCWSC, ON THIS 17 day of April, 20 14.

President, Board of Directors Dennis Brackay

ATTESTED TO:

Secretary, Board of Directors

Utility Profile
TWDB Form No. 1965 - R
Revised on: 9/1/13

Texas Water Development Board

D. Projected Demands

1. Estimate the water supply requirements for the next ten years using population trends, historical water use, economic growth, etc.

Year	Population	Water Demands (gallons)
2014	15,347	5,041,488,950
2015	15,762	517,781,700
2016	16,188	531,783,095
2017	16,626	546,163,103
2018	17,076	560,931,982
2019	17,537	576,100,188
2020	18,012	591,678,580
2021	18,499	607,678,229
2022	18,999	624,110,526
2023	19,513	640,987,171

2. Describe sources of data and how projected water demands were determined. Attach additional sheets if necessary.

Using internal population projections by H2O Analytics, which project nearly linear through the planning horizon, annual population for the next ten years was projected using the formula of x = y*(y +K) with y being the current year and the constant k being the growth facoty of 2.074% annual historical growth, and using the Region L methodology water demands were calculated by projecting 90 gcpd..

Page 4 of 11

Utility Profile
TWDB Form No. 1965 - P
Revised on: 9/1/13

Texas Water Development Board

B. System Input

Provide system input data for the previous five years.

Total System Input = Self-supplied + Imported – Exported

Year	Self-supplied Water in Gallons	Purchased/Imported Water in Gallons	Exported Water in Gallons	Total System Input	Total GPCD
2009	309,743,800	256,270,500	0	566,014,300	122
2010	277,755,400	264,888,400	0	542,643,800	110
2011	349,223,700	303,898,400	0	653,122,100	143
2012	366,777,400	254,025,700	0	620,803,100	147
2013	326,568,400	244,527,200	0	571,095,600	115
Historic 5-year Average	326,013,740	264,722,040	0	590,735,780	127

C. Water Supply System (Attach description of water system)

1. Designed daily capacity of system 2,454,749 **gallons** per day.
2. Storage Capacity:
   Elevated 900,000 **gallons**
   Ground 3,895,530 **gallons**
3. List all current water supply sources in gallons.

Water Supply Source	Source Type*	Total Gallons
Edwards Aquifer	Ground	566,980,740
CRWA	Ground	241,455,591
CRWA	Contract	162,925,500
GBRA	Contract	250,680,800
SHWSC	Contract	7,925,900
Staples Well	Ground	70,057,750

*Select one of the following source types: *Surface water, Groundwater, or Contract*

4. If surface water is a source type, do you recycle backwash to the head of the plant?
   ○ Yes _____ estimated **gallons** per day
   ◉ No

Page 3 of 11

Utility Profile
TWDB Form No. 1965 - R
Revised on: 9/1/13

Texas Water Development Board

Section I: Utility Data

A. Population and Service Area Data

1. Current service area size in square miles: 165
(Attach or email a copy of the service area map.)

2. Provide historical service area population for the previous five years, starting with the most current year.

Year	Historical Population Served By Retail Water Service	Historical Population Served By Wholesale Water Service	Historical Population Served By Wastewater Service
2009	12,740	0	0
2010	13,506	0	0
2011	12,551	0	0
2012	11,543	0	0
2013	13,557	0	0

3. Provide the projected service area population for the following decades.

Year	Projected Population Served By Retail Water Service	Projected Population Served By Wholesale Water Service	Projected Population Served By Wastewater Service
2020	25,737	0	0
2030	32,804	0	0
2040	39,853	0	0
2050	47,759	0	0
2060	55,673	0	0

4. Describe the source(s)/method(s) for estimating current and projected populations.

Projected population estimates were obtained from the approved 2011 Region L Water Plan.

Page 2 of 11

Appendix A – TWDB Utility Profile

Utility Profile
TWDB Form No. 1963 - P
Revised on: 9/1/13

Texas Water Development Board

UTILITY PROFILE FOR RETAIL WATER SUPPLIER

Fill out this form as completely as possible.
If a field does not apply to your entity, leave it blank.

CONTACT INFORMATION

Name of Utility: Crystal Clear SUD

Public Water Supply Identification Number (PWS ID): 0940015, 1940017

Certificate of Convenience and Necessity (CCN) Number: 10297

Surface Water Right ID Number: N/A

Wastewater ID Number: N/A

Completed By: Mike Fournier Title: Administrator

Address: 2370 FM 1979 City: San Marcos Zip Code: 78666

Email: mike@crystalclearsud.org Telephone Number: _____

Date: _____

Regional Water Planning Group: L Map

Groundwater Conservation District: 23, 32 Map

Check all that apply:

- ☐ Received financial assistance of $500,000 or more from TWDB
- ☑ Have 3,300 or more retail connections
- ☐ Have a surface water right with TCEQ

Page 1 of 33

Utility Profile
TWDB Form No. 1962-R
Revised on: 9/1/13

Texas Water Development Board

E. High Volume Customers

1. List the annual water use, in gallons, for the five highest volume **RETAIL customers**. Select one of the following water use categories to describe the customer; choose Residential, Industrial, Commercial, Institutional, or Agricultural.

Retail Customer	Water Use Category*	Annual Water Use	Treated or Raw
RGM Constructors	Industrial	4,951,900	Treated
Hays Energy	Industrial	3,512,100	Treated
Ameritex Pipe	Industrial	3,297,400	Treated
McIntyre Properties	Commercial	1,647,000	Treated
Havenwood POA	Commercial	1,527,800	Treated

*For definitions on recommended customer categories for classifying customer water use, refer to the online Guidance and Methodology for Reporting on Water Conservation and Water Use.

2. If applicable, list the annual water use for the five highest volume **WHOLESALE customers**. Select one of the following water use categories to describe the customer; choose Municipal, Industrial, Commercial, Institutional, or Agricultural.

Wholesale Customer	Water Use Category*	Annual Water Use	Treated or Raw
none	Choose One		Choose One
	Choose One		Choose One
	Choose One		Choose One
	Choose One		Choose One
	Choose One		Choose One

*For definitions on recommended customer categories for classifying customer water use, refer to the online Guidance and Methodology for Reporting on Water Conservation and Water Use.

F. Utility Data Comment Section

Provide additional comments about utility data below.

Page 5 of 11

Utility Profile
TWDB Form No. 1965 - R
Revised on: 9/1/13

Texas Water Development Board

Section III: Wastewater System Data

If you do not provide wastewater system services then you have completed the Utility Profile. Save and Print this form to submit with your Plan. Continue with the Water Conservation Plan Checklist to complete your Water Conservation Plan.

A. Wastewater System Data (Attach a description of your wastewater system.)

1. Design capacity of wastewater treatment plant(s): N/A **gallons** per day.

2. List the active wastewater connections by major water use category.

Water Use Category*	Active Wastewater Connections			
	Metered	Unmetered	Total Connections	Percent of Total Connections
Municipal			0	0%
Industrial			0	0%
Commercial			0	0%
Institutional			0	0%
Agricultural			0	0%
TOTAL	0	0	0	

2. What percent of water is serviced by the wastewater system? ____%

3. For the previous five years, enter the number of gallons of wastewater that was treated by the utility.

Month	Total Gallons of Treated Wastewater				
	2009	2010	2011	2012	2013
January					
February					
March					
April					
May					
June					
July					
August					
September					
October					
November					
December					
TOTAL	0	0	0	0	0

Page 10 of 11

Utility Profile
TWDB Form No. 1965 - P
Revised on: 9/1/13

Texas Water Development Board

2. For the previous five years, enter the gallons of raw water provided to RETAIL customers.

Month	Total Gallons of Raw Retail Water				
	2009	2010	2011	2012	2013
January	0	0	0	0	0
February	0	0	0	0	0
March	0	0	0	0	0
April	0	0	0	0	0
May	0	0	0	0	0
June	0	0	0	0	0
July	0	0	0	0	0
August	0	0	0	0	0
September	0	0	0	0	0
October	0	0	0	0	0
November	0	0	0	0	0
December	0	0	0	0	0
TOTAL	0	0	0	0	0

3. Summary of seasonal and annual water use.

Water Use	Seasonal and Annual Water Use					Average in Gallons
	2009	2010	2011	2012	2013	
Summer Retail (Treated + Raw)	203,213,400	156,854,200	219,091,000	186,397,300	185,353,200	190,181,820 5yr Average
TOTAL Retail (Treated + Raw)	564,263,400	542,742,800	666,837,980	627,454,200	592,053,600	598,670,396 5yr Average

E. Water Loss

Provide Water Loss data for the previous five years.

Water Loss GPCD = [Total Water Loss in Gallons ÷ Permanent Population Served] ÷ 365

Water Loss Percentage = [Total Water Loss ÷ Total System Input] x 100

Year	Total Water Loss in Gallons	Water Loss in GPCD	Water Loss as a Percentage
2009	92,939,500	20	16%
2010	86,283,400	18	16%
2011	88,654,500	19	14%
2012	90,861,400	22	15%
2013	139,964,300	28	25%
5-year average	99,740,620	21	17%

Page 8 of 11

Utility Profile
TWDB Form No. 1965 - K
Revised on: 9/1/13

Texas Water Development Board

F. Peak Water Use

Provide the Average Daily Water Use and Peak Day Water Use for the previous five years.

Year	Average Daily Use (gal)	Peak Day Use (gal)	Ratio (peak/avg)
2009	332	484	1.46
2010	330	387	1.17
2011	392	533	1.36
2012	350	427	1.22
2013	317	417	1.32

G. Summary of Historic Water Use

Water Use Category	Historic 5-year Average	Percent of Connections	Percent of Water Use
Residential SF	460,883,602	96%	77%
Residential MF	0	0%	0%
Industrial	3,247,770	0%	1%
Commercial	36,336,448	4%	6%
Institutional	0	0%	0%
Agricultural	0	0%	0%

H. System Data Comment Section

Provide additional comments about system data below.

Page 9 of 11

Utility Profile
TWDB Form No. 1965 - R
Revised on: 9/1/13

Texas Water Development Board

B. Accounting Data

For the previous five years, enter the number of gallons of RETAIL water provided in each major water use category.

Water Use Category*	Total Gallons of Retail Water				
	2009	2010	2011	2012	2013
Residential - Single Family	476,275,760	512,648,600	506,715,900	410,034,600	396,743,151
Residential – Multi-family					
Industrial				8,283,900	7,954,948
Commercial	19,252,060	29,995,200	63,538,800	34,931,000	33,965,179
Institutional					
Agricultural					
TOTAL	495,527,820	542,643,800	570,254,700	453,249,500	440,663,278

*For definitions on recommended customer categories for classifying customer water use, refer to the online Guidance and Methodology for Reporting on Water Conservation and Water Use.

C. Residential Water Use

For the previous five years, enter the residential GPCD for single family and multi-family units.

Water Use Category*	Residential GPCD				
	2009	2010	2011	2012	2013
Residential - Single Family	122	110	143	114	102
Residential – Multi-family					
TOTAL	122	110	143	114	102

D. Annual and Seasonal Water Use

1. For the previous five years, enter the gallons of treated water provided to RETAIL customers.

Month	Total Gallons of Treated Retail Water				
	2009	2010	2011	2012	2013
January	37,615,900	42,928,800	37,908,880	38,148,900	40,012,400
February	37,629,300	33,874,700	42,457,870	37,432,500	40,900,200
March	43,558,800	34,851,500	49,434,130	50,294,200	48,882,300
April	41,127,300	36,695,700	60,145,900	51,266,200	47,118,800
May	48,979,300	46,529,000	57,816,400	53,487,700	49,380,400
June	67,721,700	45,991,800	70,544,400	63,038,000	60,528,300
July	67,344,100	47,634,300	71,247,600	62,412,100	65,825,000
August	68,147,600	63,228,100	77,299,000	60,947,200	58,999,900
September	43,976,000	53,986,800	66,674,800	59,416,700	51,230,700
October	32,668,600	49,450,700	50,639,000	51,710,300	44,374,000
November	38,292,900	42,254,600	40,374,400	53,178,900	44,648,800
December	37,201,900	45,316,800	42,295,600	46,121,500	40,152,800
TOTAL	564,263,400	542,742,800	666,837,980	627,454,200	592,053,600

Page 7 of 11

Utility Profile
TWDB Form No. 1965 - II
Revised on: 9/1/13

Texas Water Development Board

Section II: System Data

A. Retail Connections

1. List the active retail connections by major water use category.

Water Use Category*	Active Retail Connections			
	Metered	Unmetered	Total Connections	Percent of Total Connections
Residential – Single Family	4,738	1	4,739	96%
Residential – Multi-family (units)	1	0	1	0%
Industrial	16	0	16	0%
Commercial	184	0	184	4%
Institutional	0		0	0%
Agricultural	0		0	0%
TOTAL	4,939	1	4,940	

*For definitions on recommended customer categories for classifying customer water use, refer to the online Guidance and Methodology for Reporting on Water Conservation and Water Use.

2. List the net number of new retail connections by water use category for the previous five years.

Water Use Category*	Net Number of New Retail Connections				
	2009	2010	2011	2012	2013
Residential – Single Family	-162	-62	62	282	93
Residential – Multi-family (units)	0	0	0	0	0
Industrial	0	0	0	0	0
Commercial	0	0	0	0	0
Institutional	0	0	0	0	0
Agricultural	0	0	0	0	0
TOTAL	-162	-62	62	282	93

*For definitions on recommended customer categories for classifying customer water use, refer to the online Guidance and Methodology for Reporting on Water Conservation and Water Use.

Page 6 of 11

CRYSTAL CLEAR

Utility Profile
TWDB Form No. 1965 - R
Revised on: 9/1/13

Texas Water Development Board

4. Can treated wastewater be substituted for potable water?
   ◯ Yes ◯ No

B. Reuse Data

1. Provide data on the types of recycling and reuse activities implemented during the current reporting period.

Type of Reuse	Total Annual Volume (in gallons)
On-site irrigation	
Plant wash down	
Chlorination/de-chlorination	
Industrial	
Landscape irrigation (parks, golf courses)	
Agricultural	
Discharge to surface water	
Evaporation pond	
Other	
TOTAL	0

C. Wastewater System Data Comment
Provide additional comments about wastewater system data below.

You have completed the Utility Profile. Save and Print this form to submit with your Plan. Continue with the Water Conservation Plan Checklist to complete your Water Conservation Plan.

Page 11 of 11

2014 43

Crystal Clear reserves the right to amend and/or supplement the plan.

APPENDIX A: CUSTOMER SERVICE FORMS

AGREEMENT FOR TEMPORARY WATER SERVICE

The service applicant indicated below ("Customer") has applied for water service from Crystal Clear Special Utility District ("District") at the service location indicated below. Under state public health and water utility service regulations [30 TAC 290.46(j)], District may not provide continuous potable water utility service to any new construction, to any existing service location where significant plumbing modifications have been made, or to any location where District has reason to believe that a cross-connection or other undesirable or unsafe condition exists until the service applicant or customer presents the District with an executed Customer Service Inspection Certificate ("C.S.I.") [30 TAC 290.47-Appendix D]. It is Customer's sole obligation and responsibility, at his/her expense, to have the necessary C.S.I. performed by a properly licensed inspector.

Notwithstanding this inspection requirement before permanent water service can be provided, District is allowed to provide Customer with temporary water service for construction purposes only. District agrees to prove such temporary construction water service as its standard rates and conditions of service upon Customer's agreement that:

1. The water service provided will be used for construction or landscaping purposes only.
2. The water provided **will not** be consumed by humans or animals.
3. Customer will notify District in writing when to initiate the temporary construction service.
4. Customer will notify District in writing when construction at the indicated service location has ended.
5. Customer agrees **not** to occupy or reside in the indicated service location until Customer has delivered a fully executed Customer Service Inspection Certificate to the District.

If Customer fails to abide by any provision of this agreement, water service to the indicated service location will be terminated and will not be restored under any circumstances until a fully executed Customer Service Inspection Certificate has been delivered to the District. Termination will be made without notice if, in the opinion of the District's licensed operator(s), Customer's service creates an immediate hazard to public health and safety. If no such hazard exists, Customer shall be notified and given a limited time to come into

compliance. District's state-approved reconnect fee will be charged as a condition of service restoration if temporary water service is terminated for breach of this agreement.

CUSTOMER NAME_____

CUSTOMER BILLING ADDRESS_____

_____

CUSTOMER PHONE NUMBER(S)_____

SERVICE LOCATION_____

Entered into in _____ County, Texas on the _____ day of _____, 20_____.

_____

Customer

_____

Crystal Clear SUD Representative

Non-Discrimination Statement

"This institution is an equal Opportunity provider and employer.

If you wish to file a Civil Rights program complaint of discrimination, complete the USDA Program Discrimination Complaint Form, found on line at http://www.ascr.usda.gov/complaint_filing_cust.html, or at any USDA office, or call (866) 632-9992 to request the form. You may also write a letter containing all of the Information requested in the form. Send your completed complaint form or letter to us by mail at U.S. Department of Agriculture, Director, Office of Adjudication, 1400 Independence Avenue, S.W., Washington, D.C. 20250-9410, by fax (202) 690-7442, or email at program.intake@usda.gov ."

CRYSTAL CLEAR
SPECIAL UTILITY DISTRICT

SERVICE APPLICATION

CCSUD REP._____

Please Print:

DATE _____

APPLICANT'S NAME_____

CO-APPLICANT'S NAME_____

CURRENT BILLING ADDRESS

_____

_____

PHONE NUMBER-HOME (___) _____-_____

MOBILE (___) _____-_____

EMAIL ADDRESS _____

CHECK BOX IF WE MAY EMAIL YOUR MONTHLY BILLS ☐ YES ☐ NO

LEGAL DESCRIPTION OF PROPERTY (Include name of road, subdivision with lot and block number.):

_____

PREVIOUS OWNER'S NAME AND ADDRESS (IF TRANSFERRING MEMBERSHIP):

_____

ACREAGE _____

HOUSEHOLD SIZE _____

NUMBER IN FAMILY _____

LIVESTOCK & NUMBER _____

SPRINKLER SYSTEM ☐ YES ☐ NO

SPECIAL SERVICE NEEDS OF APPLICANT _____

_____

NOTE: FORM MUST BE COMPLETED BY APPLICANT ONLY. A MAP OF SERVICE LOCATION REQUEST MUST BE ATTACHED.

The following information is requested by the Federal Government in order to monitor compliance with Federal laws prohibiting discrimination against applicants seeking to participate in this program. You are not required to furnish this information, but are encouraged to do so. This information will not be used in evaluating your application or to discriminate against you in any way. However, if you choose not to furnish it, we are required to note the race/ national origin of individual applicants on the basis of visual observation or surname.	
Ethnicity ☐ Hispanic/ Latino ☐ Not Hispanic/ Latino **Gender:** ☐ Male ☐ Female	**Race:** ☐ Black or African American ☐ White ☐ Asian ☐ Native Hawaiian/ Other Pacific Islander ☐ American Indian/ Alaska Native

Non-Discrimination Statement

PROOF OF OWNERSHIP PROVIDED BY _____**WARRANTY DEED**____**(RECEIVED BY**_____**)**

"This institution is an equal Opportunity provider and employer.

If you wish to file a Civil Rights program complaint of discrimination, complete the USDA Program Discrimination Complaint Form, found on line at http://www.ascr.usda.gov/complaint_filing_cust.html , or at any USDA office, or call (866) 632-9992 to request the form. You may also write a letter containing all of the information requested in the form. Send your completed complaint form or letter to us by mail at U.S. Department of Agriculture, Director, Office of Adjudication, 1400 Independence Avenue, S.W., Washington, D.C. 20250-9410, by fax (202) 690-7442, or email at program.intake@usda.gov."

District Use Only

Account Number_____
Project Number_____
Cost of Engineer Study_____ $_____
Engineer Study Completion Date_____
Service Classification_____
Amount Paid_____ $_____
Service Order Number_____
Customer Service Inspection Date_____
BPAT Required (Date)_____
Application Taken By_____

AGREEMENT made this _____ day of _____, 20_____ between **CRYSTAL CLEAR SPECIAL UTILITY DISTRICT**, a District organized under the laws of the State of Texas (hereinafter called the District) and _____ _____ (hereinafter called the Applicant).

The District shall sell and deliver water and/or wastewater service to the Applicant and the Applicant shall purchase, receive, and/or reserve service from the District in accordance with the Rules and Regulations of the District as amended from time to time by the Board of Directors of the District. Upon compliance with said policies, including payment of a Deposit Fee, the Applicant qualifies for service as a new applicant or as a transferee and thereby may hereinafter be called an Applicant.

The Applicant shall pay the District for service hereunder as determined by the District's Rules and Regulations and upon the terms and conditions set forth therein, a copy of which can be requested, Applicant acknowledges hereof by execution of this agreement. A copy of this agreement shall be executed before service may be provided to the Applicant.

The District shall have the authority to discontinue service and cancel the Deposit of the Applicant not complying with any policy or not paying any utility fees or charges as required by the District's published rates, fees and conditions of service. At any time service is discontinued, terminated or suspended, the District shall not re-establish service unless it has a current, signed copy of this agreement.

Applicant, upon qualification for service under the terms of the District's policies, shall agree to pay the monthly charges for such service as prescribed by the District's Rules and Regulations. Any breach of this agreement shall give cause for the District to liquidate, as damages, the Deposit fees previously paid to defray any losses incurred by the District. If delivery of service to said location is deemed infeasible by the District as a part of this project, the Applicant shall be denied service with the District and the Indication on Interest Fee, less expense, shall be refunded. The Applicant may re-apply for service at a later date under the terms and conditions of the District's policies. For the purposes of this agreement, an Indication of Interest Fee shall be of an amount equal to the District's Deposit Fees.

All water shall be metered by meters to be furnished and installed by the District. The meter and/or wastewater connection is for the sole use of the Applicant or Customer and is to provide service to only one (1) dwelling or one (1) business. Extension of pipe(s) to transfer utility service from one property to another, to share, resell, or sub meter water to any other persons, dwellings, businesses, or property, etc., is prohibited._____

The District shall have the right to locate a water service meter and the pipe necessary to connect the meter on the Applicant's property at a point to be chosen by the District, and shall have access to its property and equipment located upon Applicant's premises at all reasonable and necessary times for any purpose connected with or in the furtherance of its business operations, and upon discontinuance of service the District shall have the right to remove any of its equipment from the Applicant's property. The Applicant shall install, at their own expense, any necessary service lines from the District's facilities and equipment to the point of use, including any customer service isolation valves, backflow prevention devices, clean-outs, and other equipment as may be specified by the District. The District shall also have access to the Applicant's property for the purpose of inspecting for possible cross-connections, potential contamination hazards, illegal lead materials, and any other violations or possible violations of state and federal statutes and regulations relating to the federal Safe Drinking Water Act or Chapter 341 of the Texas Health and Safety Code and/or the District's Rules and Regulations and service policies. _____

The District is responsible for protecting the drinking water supply from contamination or pollution which could result from improper practices. This service agreement serves as notice to each Applicant of the restrictions which are in place to provide this protection. The District shall enforce these restrictions to ensure the public health and welfare. The following undesirable practices are prohibited by state regulations:

a. No direct connection between the public drinking water supply and a potential source of contamination is permitted. Potential sources of contamination shall be isolated from the public water system by an air gap or an appropriate backflow prevention assembly in accordance with state regulations.
b. No cross-connection between the public drinking water supply and a private water system is permitted. These potential threats to the public drinking water supply shall be eliminated at the service connection by the proper installation of an air gap or a reduced pressure zone backflow prevention assembly and a service agreement must exist for annual inspection and testing by a certified backflow prevention device tester.

c. No connection which allows condensing, cooling, or industrial process water to be returned to the public drinking water supply is permitted.
d. No pipe or pipe fitting which contains more than 8.0% lead may be used for the installation or repair of plumbing on or after July 1, 1988, at any connection which provides water for human consumption.
e. No solder or flux which contains more than 0.2% lead may be used for the installation or repair plumbing on or after July 1, 1988, at any connection which provides water for human consumption.

The District shall maintain a copy of this agreement as long as the Applicant and/or premises are connected to the public water system. The Applicant shall allow their property to be inspected for possible cross-connections, potential contamination hazards, and illegal lead materials. These inspections shall be conducted by the District or its designated agent prior to initiating service and periodically thereafter. The inspections shall be conducted during the District's normal business hours.

The District shall notify the Applicant in writing of any cross-connections or other undesirable practices which have been identified during the initial or subsequent inspections. The Applicant shall immediately correct any undesirable practice on their premises. The Applicant shall, at their expense, properly install, test, and maintain any backflow prevention device required by the District. Copies of all testing and maintenance records shall be provided to the District as required. Failure to comply with the terms of this service agreement shall cause the District to terminate service or properly install, test, and maintain an appropriate backflow prevention device at the service connection. Any expenses associated with the enforcement of this agreement shall be billed to the Applicant.

In the event the total water supply is insufficient to meet the needs of all the Customers, or in the event there is a shortage of water, the District may initiate the Emergency Conservation Program as specified in the District's Rules and Regulations. By execution of this agreement, the Applicant hereby shall comply with the terms of said program.

By execution hereof, the Applicant shall hold the District harmless from any and all claims for damages caused by service interruptions due to water line breaks by District or like contractors, tampering by other Customers/users of the District, normal failures of the system, or other events beyond the District's control.

The Applicant shall grant to the District permanent recorded easement(s) dedicated to the District for the purpose of providing reasonable rights of access and use to allow the District to construct, maintain, replace, upgrade, parallel, inspect, test and operate any facilities

necessary to serve the Applicant as well as the District's purposes in providing system wide service for existing or future Customers.

By execution hereof, the Applicant shall guarantee payment of all other rates, fees, and charges due on any account for which said Applicant is a Customer. Said guarantee shall pledge any and all Deposit Fees against any balance due the District. Liquidation of said Deposit Fees shall give rise to discontinuance of service under the terms and conditions of the District's Rules and Regulations. _____

By execution hereof, the Applicant agrees that non-compliance with the terms of this agreement by said Applicant shall constitute denial or discontinuance of service until such time as the violation is corrected to the satisfaction of the District.

Any misrepresentations of the facts by the Applicant on any of the pages of this agreement shall result in discontinuance of service pursuant to the terms and conditions of the District's Rules and Regulations.

_____	_____
Applicant	Applicant
_____	_____
Date	Date

Non-Discrimination Statement

"This institution is an equal Opportunity provider and employer.

If you wish to file a Civil Rights program complaint of discrimination, complete the USDA Program Discrimination Complaint Form, found on line at http://www.ascr.usda.gov/complaint_filing_cust.html, or at any USDA office, or call (866) 632-9992 to request the form. You may also write a letter containing all of the Information requested in the form. Send your completed complaint form or letter to us by mail at U.S. Department of Agriculture, Director, Office of Adjudication, 1400 Independence Avenue, S.W., Washington, D.C. 20250-9410, by fax (202) 690-7442, or email at program.intake@usda.gov ."

NOTICE TO CUSTOMERS REGARDING CLOSED SYSTEMS

All new meter services may be installed with a dual check valve. The dual check valve prevents water from flowing backwards into the water main. This causes customers to have a closed system. In the event that a customer does not have a pop off valve on his/her water heater(s), the presence of a closed system could cause danger to the customer. Crystal Clear Special Utility District **IS NOT LIABLE** for any damages caused at a customer's property due to the customer's closed system. To find out if you have a closed system, call Crystal Clear SUD at 830-372-1031, or make sure your water heater has the pop off valve in place; either will protect your property.

State law also requires that vacuum breakers be installed on any faucet that a water hose may be attached to. These vacuum breakers are available at most plumbing supply companies.

ACCOUNT #_____DATE_____

CUSTOMER (PRINT NAME)_____

SERVICE ADDRESS_____

CUSTOMER (SIGNATURE)_____

EXAMPLE: Simply leaving a hose, connected to a faucet, submerged in a sink or any other water basin, can create a serious health threat. When the faucet is left running, or when it leaks, a loss in pressure of the supply main can siphon contaminating materials back into the potable water system.

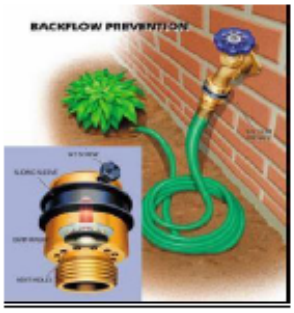

Non-Discrimination Statement

"This institution is an equal Opportunity provider and employer.

If you wish to file a Civil Rights program complaint of discrimination, complete the USDA Program Discrimination Complaint Form, found on line at http://www.ascr.usda.gov/complaint_filing.cust.html, or at any USDA office, or call (866) 632-9992 to request the form. You may also write a letter containing all of the Information requested in the form. Send your completed complaint form or letter to us by mail at U.S. Department of Agriculture, Director, Office of Adjudication, 1400 Independence Avenue, S.W., Washington, D.C. 20250-9410, by fax (202) 690-7442, or email at program.intake@usda.gov ."

CRYSTAL CLEAR
SPECIAL UTILITY DISTRICT

REQUEST FOR SERVICE DISCONTINUANCE

I, _____, hereby request that my water meter with Account Number _____, located at the following address:

_____

be disconnected from Crystal Clear Special Utility District service, as of _____ and that my Deposit be refunded to me. I understand that any and all balances I owe the District will be subtracted from my Deposit prior to any refund due. I understand that if I ever want my service reinstated, I will have to reapply for service as a new Customer and I will have to pay all costs as indicated in the then current copy of the Crystal Clear Special Utility District Rules and Regulations. Future ability to provide service will be dependent upon system capacity, which I understand may be limited and may require capital improvements to deliver adequate service. I also understand that these improvements will be at my cost. I further represent to the District that my spouse joins me in this request and I am authorized to execute this Request for Service Discontinuance on behalf of my spouse.

_____ _____

Signature Date

Non-Discrimination Statement

"This institution is an equal Opportunity provider and employer.

If you wish to file a Civil Rights program complaint of discrimination, complete the USDA Program Discrimination Complaint Form, found on line at http://www.ascr.usda.gov/complaint_filing.cust.html, or at any USDA office, or call (866) 632-9992 to request the form. You may also write a letter containing all of the Information requested in the form. Send your completed complaint form or letter to us by mail at U.S. Department of Agriculture, Director, Office of Adjudication, 1400 Independence Avenue, S.W., Washington, D.C. 20250-9410, by fax (202) 690-7442, or email at program.intake@usda.gov ."

_____

CCSUD Representative

CRYSTAL CLEAR
SPECIAL UTILITY DISTRICT

ACCOUNTS_____ DATE_____

TO_____

ADDRESS_____

_____

CHECK NUMBER/DRAFT_____

AMOUNT OF CHECK (including fees due)_____

Your check/draft has been returned to us by your bank for the following reason(s)

_____

You have ten days from the date of this notice or by _____in which to redeem the returned check/draft and pay an additional $30.00 Returned Check/Draft Fee. Redemption of the returned check/draft and payment of additional fees may be made by cash, money order, credit card or certified check. If you have not redeemed the returned check/draft and paid the additional service fees within ten days, your utility service will be disconnected. If you have two or more returned checks within a twelve month period, you will be required to make future utility bill payments in cash or by money order for a period of twelve months.

CRYSTAL CLEAR SUD MANAGEMENT

CRYSTAL CLEAR SPECIAL UTILITY DISTRICT RIGHT-OF-WAY EASEMENT DENIAL FORM AND AFFIDAVIT

PROPERTY OWNER'S NAME LEGAL DESCRIPTION OF PROPERTY

Crystal Clear Special Utility District has attempted to acquire an easement for a community water distribution system across your property. It is now necessary to require this notice. Attached is Crystal Clear SUD's standard easement form as furnished to us by the Rural Development. If you are not in agreement to grant easement, sign the middle portion of this document and return it to us, at which time this document will be filed in our office. Failure to return this document or the attached easement will result in a copy of this document being completed and signed by us to keep on file for future reference purposes. Failure to grant easement does not relive Crystal Clear SUD of the obligation to serve water to the aforementioned property in the future, but does make the then current property owner, at time of application for water service, responsible for the financial burden of moving the water line from public right-of-way to private right-of-way plus any other normal charges for service. For further clarification, contact our office at 2370 FM 1979, San Marcos, TX 78666 (830) 372-1031, Fax (830) 372-0067.

I, _____ hereby refuse Crystal Clear SUD an easement for a community water distribution system on the aforementioned property.

_____

Signature of Property Owner

CRYSTAL CLEAR
SPECIAL UTILITY DISTRICT

SERVICE AVAILABILITY REQUEST FORM

Date _____ CSR _____

This Service Availability Form is a "conditional" approval for service based on current conditions of the system. Service cannot be confirmed until application for service is accepted and fees have been paid. This approval is voided after 180 days of receipt or if the system conditions change due to other applications or service commitments.

Signature below acknowledges acceptance of the above terms.

_____

Name_____

Location of service requested_____

Phone Number_____

****

Engineer Use Only

New meter service approved _____Yes _____No

If no, explanation_____

Extra construction needed _____Yes _____No

Date_____Authorized Signature_____

Non-Discrimination Statement

"This institution is an equal Opportunity provider and employer.

If you wish to file a Civil Rights program complaint of discrimination, complete the USDA Program Discrimination Complaint Form, found on line at http://www.ascr.usda.gov/complaint_filing_cust.html , or at any USDA office, or call (866) 632-9992 to request the form. You may also write a letter containing all of the information requested in the form. Send your completed complaint form or letter to us by mail at U.S. Department of Agriculture, Director, Office of Adjudication, 1400 Independence Avenue, S.W., Washington, D.C. 20250-9410, by fax (202) 690-7442, or email at program.intake@usda.gov."

Sample Variance for Drought Form

Date_____

Based on the landscapers' recommendations for a watering plan, the water action plan proposal is as follows:

Run each zone for 15 minutes 3 times a week for the next 2 weeks (Aug. 17th – Aug 31st)

Decrease watering time to 8 minutes per zone, 3 times a week for the next 3 weeks (Sept 1st – Sept 21)

Decrease watering days from 3 days to 2 days per week for 2 weeks (Sept 22-Oct 6th)

Then once a week for 2 weeks (Oct 7th – 21st).

Follow water restrictions at this point (after Oct 21st).

_____

Signature

POLICIES OF CRYSTAL CLEAR SPECIAL UTILITY DISTRICT
REGARDING CUSTOMER LINE EXTENSIONS

Date_____

Crystal Clear Special Utility District will serve new Customers on a first come basis as long as water supply and line size are adequate to serve new Customers without decreasing water pressure and service to present Customers.

Anyone desiring to extend any of Crystal Clear Special Utility District's lines must submit the request and have it approved by Crystal Clear Special Utility District's Engineer and Board of Directors.

Anyone desiring to extend the water line to secure water service must pay all costs of installing the extended line. All line extensions must be according to Crystal Clear Special Utility District's specifications.

All Rules and Regulations apply to all Customers.

The Contractor installing the line **must be approved** by Crystal Clear Special Utility District.

A plan of the line extension and a plat of any subdivision must be supplied to Crystal Clear Special Utility District. This plan and plat must be updated if changes are made.

After the line extension is completed and accepted by Crystal Clear Special Utility District, the line becomes the property of Crystal Clear Special Utility District. The person paying for the installation is responsible for repairing all leaks and breakage on the line for **one year**, after completion.

The only time Crystal Clear Special Utility District promises water service is when a Deposit is approved, purchased and the monthly charges are paid.

For a period of **five years**, anyone wishing to become a Customer of Crystal Clear Special Utility District and have water service on the line extension shall have to pay a reasonable share of the line extension (construction costs only) to the person(s) paying for the line extension. This reasonable share is to be determined by Crystal Clear Special Utility District. For a period of **five years** any new customers must pay $_____, as a reasonable share to _____ in addition to the regular fees required.

Customer_____ CCSUD_____

Non-Discrimination Statement

"This institution is an equal Opportunity provider and employer.

If you wish to file a Civil Rights program complaint of discrimination, complete the USDA Program Discrimination Complaint Form, found on line at http://www.ascr.usda.gov/complaint_filing_cust.html, or at any USDA office, or call (866) 632-9992 to request the form. You may also write a letter containing all of the information requested in the form. Send your completed complaint form or letter to us by mail at U.S. Department of Agriculture, Director, Office of Adjudication, 1400 Independence Avenue, S.W., Washington, D.C. 20250-9410, by fax (202) 690-7442, or email at program.intake@usda.gov ."

CRYSTAL CLEAR
SPECIAL UTILITY DISTRICT

METER TEST AUTHORIZATION FORM

NAME_____ DATE OF REQUEST_____

SERVICE ADDRESS_____

EMAIL_____ PHONE NUMBER_____

METER SERIAL NUMBER_____ FINAL READING_____

REASON FOR REQUEST_____

Customer requesting a meter test shall accept test results shown by the District. Customer acknowledges and agrees that an initial field test may be performed using a calibrated or marked volumetric container. A subsequent bench test of the meter will be performed thereafter if the field test indicates the meter tests high. The subsequent test shall be conducted in accordance with the American Water Works Association standards and methods on a certified test bench. Customer agrees to pay the District's experienced cost of testing by a third party agency for the test if the results indicate an AWWA acceptable performance, plus any outstanding water utility service. In the event the Customer is required to pay for the test and for outstanding water utility service as set forth herein, said charges shall be applied to the next billing sent to the Customer after the date of the test.

_____ _____

Customer Signature Date

2370 FM 1979, San Marcos, Texas 78666 830-372-1031

_____ _____

_____ Account #

_____ _____

Date

Re: **Notice of Possible Violation** (Multiple Premises Being Served by a Single Meter)

It has come to the attention of Crystal Clear Special Utility District that your meter may be serving multiple residences and/or dwellings in violation of state health and safety laws and Crystal Clear Special Utility District's Rules and Regulations. Such a potential violation could result in termination of water service to the meter now being served as there is only a commitment to serve one dwelling. Before your water service will be restored, you will be required to pay all deposits and application fees for any additional residences/dwellings.

Attached is a copy of the Texas Commission on Environmental Quality ("TCEQ") regulatory guidance document on individual metering of consuming facilities. We respectfully request that you contact Crystal Clear Special Utility District at 830-372-1031 to avoid losing your water service. If you fail to initiate resolution of this matter within thirty (30) days of this letter, you will be subject to termination without further notice.

Thank you in advance for your prompt attention to this matter.

Sincerely,

Crystal Clear Special Utility District Representative

APPENDIX B: Non-Standard Developer Forms

EQUIPMENT AND LINE DEDICATION AGREEMENT

_____ ("Transferor"), having complied with the Developer, Subdivision, and Non-standard Service Requirements contained in the Rules and Regulations of Crystal Clear Special Utility District (the "District"), the District's Rules and Regulations, and the requirements and conditions set forth in the Non-Standard Service Contract between the District and Transferor dated _____, 20_____, Transferor does hereby dedicate, transfer and assign to the District all rights and privileges to and ownership of all equipment, facilities and improvements (collectively the "Improvements") installed as a condition of service, which Improvements are described in the above-described Non-Standard Service Contract and any amendments thereto, and being further described in the document(s) attached hereto as Exhibit "A" or as follows:

On the _____ day of _____, 20_____, the District through its Board of Directors agreed to accept the above-described Improvements. The District shall, from this day forward, hold Transferor harmless from any costs for repairs or maintenance of said Improvements, notwithstanding any warranty or maintenance bonds for said repairs or maintenance as per the Non-Standard Service Contract.

This agreement is entered into on _____, 20____, by:

CRYSTAL CLEAR SUD TRANSFEROR:

By_____
General Manager
2370 FM 1979
San Marcos, TX 78666

STATE OF TEXAS §
COUNTY OF GUADALUPE §

IN WITNESS WHEREOF the said Transferor and General Manager of the Crystal Clear Special Utility District have executed this instrument on this _____ day of _____, 20_____.

BEFORE ME, the undersigned, Notary Public, on this day personally appeared _____ and _____ known to me to be the persons whose names are subscribed to the foregoing instrument, and acknowledged to me that he/she/they executed the same for the purpose and consideration therein expressed.

GIVEN UNDER MY HAND AND SEAL on this _____ day of _____, 20_____.

_____

Notary Public, State of Texas

CRYSTAL CLEAR
SPECIAL UTILITY DISTRICT

2370 FM 1979, San Marcos, TX 78666 830-372-1031

NON-STANDARD SERVICE APPLICATION

Date_____ Service Requested Water_____ Waste Water_____

NAME OF PROPOSED DEVELOPMENT

Maximum Number of Lots_____ Standard Lot Size_____

NAME OF APPLICANT/DEVELOPER_____

Name & Title of Person Completing Application_____
Mailing Address_____
Telephone_____ Email_____

NAME OF PROPERTY OWNER_____
Mailing Address_____
Telephone_____ Email_____

NAME OF ENGINEERING FIRM_____

Responsible Engineer_____
Mailing Address_____
Telephone_____ Email_____

LEGAL DESCRIPTION OF PROPERTY (State or Attach)_____

TYPE OF DEVELOPMENT (Check all that apply)

Residential Subdivision ☐ Apartments ☐ Manufactured Home Park ☐
RV Park ☐ Commercial/Industrial Park ☐ Other Large Meter Applicant ☐
(Standard Meter) ☐

SPECIAL SERVICE NEEDS

ADDITIONAL INFORMATION

1. Is the property located in the corporate limits or ETJ of a municipality? Yes _____ No _____

If yes, provide the name of the municipality

2. Are additional phases planned for this development? Yes _____ No _____

If yes, please explain

REQUIRED ATTACHMENTS: Please indicate whether the following items are attached:

1. Three (3) copies of the preliminary plat.....Yes _____ No _____

2. Three (3) copies of the final plat.....Yes _____ No _____

3. Three (3) copies of the water utility/line extension plans..... Yes _____ No _____

4. A location map of the proposed development..... Yes _____ No _____

5. A valid check covering the estimated Service Investigation Fee..... Yes _____ No _____

This application must be completed by the Applicant only. Crystal Clear Special Utility District will take no action related to the above-described development until this application is complete. A signed application will be considered complete only after the district has received all required attachments, including a valid check in the amount of the estimated Service Investigation Fee. Please contact the General Manager to obtain the estimated fee amount.

I CERTIFY, AS THE APPLICANT OR AS AN AUTHORIZED REPRESENTATIVE ON BEHALF OF THE APPLICANT THAT THE FOREGOING REPRESENTATIONS CONTAINED IN THIS APPLICATION ARE TRUE AND CORRECT.

SIGNED _____

Print Name/ Title

FOR ADMINISTRATIVE USE ONLY

NOTICE OF REQUIREMENT TO COMPLY WITH THE SUBDIVISION AND SERVICE EXTENSION POLICY OF CRYSTAL CLEAR SPECIAL UTILITY DISTRICT

Pursuant to Chapter 13.2502 of the Texas Water Code, Crystal Clear Special Utility District hereby gives notice that any person who subdivides land by dividing any lot, tract, or parcel of land, within the service area of Crystal Clear Special Utility District, Certificate of Convenience and Necessity No. 10297, serving Guadalupe, Hays, Comal and Caldwell Counties and other areas, into two or more lots or sites for the purpose of sale or development, whether immediate or future, including re-subdivision of land for which a plat has been filed and recorded or requests more than two water service connections on a single contiguous tract of land must comply with Developer, Subdivision, and Non-Standard Service Requirements (the "Subdivision Policy") contained in Crystal Clear Special Utility District's Rules and Regulations.

Crystal Clear Special Utility District is not required to extend retail water or waste water utility service to a service applicant in a subdivision where the applicant of the subdivision has failed to comply with the Subdivision Policy.

Among other requirements, the Subdivision Policy requires the applicant to:

- complete a Non-Standard Service Application
- submit an approved final plat showing the requested service area
- pay a Service Investigation Fee
- enter into a Non-Standard Service Contract and/or other agreements

Applicable elements of the Subdivision Policy, depending on the specific circumstances of the subdivision service, may include:

- evaluation by Crystal Clear Special Utility District of the impact a proposed subdivision service extension will make on Crystal Clear Special Utility District's water supply and/or sewer system and payment of the costs for this evaluation;
- payment of fees for reserving water supply and/or wastewater collection capacity;
- forfeiture of reserved water supply capacity for failure to pay applicable fees;
- payment of costs of any improvements to Crystal Clear Special Utility District's system that are necessary to provide the water and/or service;
- construction according to design approved by Crystal Clear Special Utility District and dedication by the developer of water facilities within the subdivision following inspection.

Crystal Clear Special Utility District's Rules and Regulations and a map showing Crystal Clear Special Utility District's service area may be reviewed at Crystal Clear Special Utility District's offices at 2370 FM 1979, San Marcos, TX 78666. The Rules and Regulations and service area map also are filed of record at the Texas Commission on Environmental Quality in Austin, Texas and may be reviewed by contacting the TCEQ, Utility Rates and Services [Certification and Rate Design] Section, Water Utilities Division, P.O. Box 13087, Austin, Texas 78711.

NON-STANDARD SERVICE CONTRACT
BY AND BETWEEN CRYSTAL CLEAR SPECIAL UTILITY DISTRICT
AND
(_____)

This Non-standard Service Contract ("Contract") is entered into by and between Crystal Clear Special Utility District (the "District") and_____ ("Developer"), a Texas _____.

WHEREAS, Developer is engaged in developing a _____± acre tract of land out of the _____ Survey (Abstract No. _____) in _____County, Texas, and more particularly described or shown in Exhibit "A" attached hereto and incorporated herein by reference (the "Property");

WHEREAS, Developer intends to develop a residential subdivision on the Property known as _____, an addition to the City of _____, _____ _____County, Texas (the "Development"), in accordance with plans and specifications submitted to the District for review and approval;

WHEREAS, the Property is located with the District's service area where the District owns and operates a retail public water system and sewer (waste water) system under Certificate of Convenience and Necessity No. 10297, respectively, for domestic use and purposes;

WHEREAS, Developer has requested the District to provide water and sewer service to the Property through an extension of the District's water supply and sewage collection systems, such extension being hereinafter referred to as the "Off-Site Facilities;"

WHEREAS, Developer intends to construct water distribution and sewer collection facilities on the Property through which the District will provide water and sewer service to a maximum of _____ (_____) standard service connections (i.e. 5/8" x 3/4" meters) in the Development, such facilities being hereinafter referred to as the "On-Site Facilities;"

WHEREAS, the Off-Site Facilities and On-Site Facilities shall be hereinafter collectively referred to as the "Utility Service Improvements;"

WHEREAS, the District declares the Development a "High Density Development" pursuant to its Rules and Regulations;

WHEREAS, the District has agreed to take the actions necessary to make water available and to serve the Property pursuant to the terms and conditions of this Contract.

NOW THEREFORE, KNOW ALL MEN BY THESE PRESENTS, that for and in consideration for the mutual promises hereinafter expressed, and other good and valuable consideration, the sufficiency of which is hereby acknowledged by the parties, Developer and the District agree as follows:

1. Engineering and Design of the Off-Site Facilities.

A. The Off-Site Facilities shall be engineered and designed by a Texas Licensed Professional Engineer in accordance with the applicable specifications of the District and all governmental agencies having jurisdiction. All plans and specifications for the Off-Site Facilities must be reviewed and approved by the District's consulting engineer prior to the issuance of any invitation for bids for construction of the Off-Site Facilities. Upon approval of the plans and specifications by the District's consulting engineer, the plans and specifications shall become part of this Contract by reference and shall more particularly define the "Off-Site Facilities."

B. The Off-Site Facilities must be sized to provide continuous and adequate water service to the Property based on plats and plans for the Development submitted to the District by Developer. The District may require the Off-Site Facilities to be upsized in anticipation of the needs of other or future customers of the District, subject to an obligation by the District to reimburse Developer for the additional cost of such upsizing as provided for herein below. Notwithstanding anything herein to the contrary, the District shall have no obligation to reimburse Developer for any Off-Site Facilities that utilize up to an eight inch (8") internal diameter service line.

2. Engineering and Design of the On-Site Facilities.

The On-Site Facilities shall be engineered and designed by a Texas Licensed Professional Engineer in accordance with the applicable specifications of the District and all governmental agencies having jurisdiction. All plans and specifications for the Off-Site Facilities must be reviewed and approved by the District's consulting engineer prior to the issuance of any invitation for bids for construction of the On-Site Facilities. After such approval of the plans and specifications by the District's consulting engineer, the plans and specifications shall become part of this Contract by reference and shall more particularly define the "On-Site Facilities."

3. Required Easements or Rights-of-Way.

A. Developer shall be responsible for dedicating or acquiring any easements across privately owned land or sites (including off-site) which the District determines are necessary for the construction or operation of the Utility Service Improvements and for obtaining any governmental approvals necessary to construct the Utility Service Improvements in public right-of-ways.

B. Any easements acquired by Developer shall be in a form approved by the District and shall be assigned to the District upon proper completion of the construction of the Utility Service Improvements. The legal instruments by which Developer will acquire any such easements or assign such easements to the District must be approved by the District's attorney prior to the acquisition of such easements by Developer.

4. **Construction of the Utility Service Improvements.**

A. To construct the Utility Service Improvements, Developer shall select a qualified contractor subject to the District's approval or advertise for bids for construction of the Utility Service Improvements, in accordance with generally accepted bidding practices, and shall award the contract for construction subject to the District's approval. The District may reject any bid.

B. Upon the selection and approval of a contractor, Developer shall prepare and submit a construction contract to the District for its review and approval.

C. The contractor shall obtain and tender payment and completion bonds in the full amount of the contract price. The bond forms and the underwriters are subject to the District's approval.

D. Upon execution of the approved construction contract, Developer shall escrow the full amount of the contract price with the District or execute a Three-Way Contract approved by the District's attorney. If the contract price is escrowed with the District by Developer, the District shall pay the contractor's pay requests pursuant to the terms and conditions of the construction contract.

E. The Utility Service Improvements shall be constructed in accordance with the approved plans and specifications and the District's Rules and Regulations. The District shall have the right to inspect and approve all phases of the construction of the Utility Service Improvements. Developer must give written notice to the District of the date on which construction is scheduled to commence so that the District may assign an inspector. The District may charge reasonable inspection fees based on the actual costs of labor, travel and incidental expenses of the inspectors, plus ten percent (10%) overhead.

5. **Dedication of Utility Service Improvements to the District.**

Upon proper completion of construction of the Utility Service Improvements, and final inspection and approval thereof by the District, Developer shall dedicate the Utility Service Improvements to the District by an appropriate legal instrument approved by the District's attorney. The Utility Service Improvements shall thereafter be owned by the District subject to Developer's maintenance bond in an amount of not less than twenty percent (20%) of the total construction cost of the Utility Service Improvements and for a term of not less than two (2) years. Developer's maintenance bond is subject to the approval of the District's attorney. Any connection of individual customers to the Utility Service Improvements shall be made by the District.

6. **Cost of the Utility Service Improvements.**

A. Developer shall pay or reimburse the District for all costs associated with the Utility Service Improvements as a contribution in aid of construction including, without limitation, the cost of the following:

(1) engineering and design;
(2) easement and right-of-way acquisitions;
(3) construction;
(4) inspections;
(5) attorney's fees;
(6) insurance and bond premiums; and
(7) governmental or regulatory approvals required to lawfully provide service.

B. Developer shall indemnify the District and hold the District harmless from all of the foregoing costs.

C. As reflected in the approved plans and specifications for the Off-Site Facilities, the District has required Developer to oversize all or a portion of the Off-Site Facilities in anticipation of the needs of other customers of the District. The District shall reimburse Developer pro rata for the additional costs of construction attributable to oversizing the Off-Site Facilities, as determined by the District's consulting engineer, in accordance with paragraph 7 below.

7. **Pro Rata Reimbursement.**

A. For a period not to exceed ten (10) years following the acceptance date of the Off-Site Facilities constructed pursuant to this Contract, the District will collect from any applicant that connects or desires to connect to the Off-Site Facilities a pro-rata fee that is determined in accordance with the formula set forth in Exhibit "B" attached hereto and incorporated herein by reference.

B. The District will tender pro-rata reimbursements only to Developer at the address set forth in paragraph 12 below. It will be the duty of Developer to notify the District in writing of any change of address in accordance with paragraph 12.

C. The District may assess a ten percent (10%) administrative fee for the administration of pro-rata reimbursements which shall be deducted from all pro-rata fees collected by the District before remittance to Developer.

8. **Service Investigation Fee.**

A. Simultaneous with Developer's execution and delivery of this Contract to the District, Developer shall pay a Service Investigation Fee of $_____ to the District plus any additional sums required by the District to cover administrative, legal and engineering fee that will be incurred by the District to investigate the District's ability to provide water service to the Property and Development including, without limitation, fees incurred for:

(1) reviewing and approving plats, plans and specifications;

(2) obtaining or determining cost estimates for construction;

(3) advertising and accepting bids for construction;

(4) preparing a non-standard service contract between the District and Developer; and

(5) obtaining or providing other services as required by the District for such investigation.

B. The District shall refund the remaining balance of the fee, if any, upon completing its service investigation, including the completion of all legal and engineering services associated with processing Developer's non-standard service request. If the fee paid by Developer is not sufficient to pay all expenses incurred or to be incurred by the District in performing the service investigation, Developer shall pay or reimburse the District for such expenses upon written request, and the District shall have no obligation to complete processing Developer's non-standard service request until the requested payment or reimbursement has been paid.

9. Service Connection Fees.

A. The District currently charges a Connection Fee of $_____ for a standard water service connection and Connection Fee of $_____ for a standard sewer service connection. For purposes of this Contract, the Connection Fee for water service includes all fees and charges required for a residential customer to obtain water and sewer service from the District except for the cost of meter installation and the customer Deposit. Developer shall pay to the District a total Connection Fee of $_____ for the _____ (_____) standard (residential) service connections in the Development according to the following schedule:

(1) Payment 1: Developer shall pay the sum of $_____ to the District for _____ connections prior to commencing construction of the Utility Service Improvements for the Development.

(2) Payment 2: Developer shall pay the sum of $_____ to the District for _____ connections prior to the District approving and accepting dedication of the Utility Service Improvements.

B. Against the Connection Fees to be paid by Developer to the District, the District will credit Developer for the reasonable costs incurred and paid by Developer for construction of the Off-Site Facilities to provide water service to the Property as determined by the District's consulting engineer.

10. Service From the Utility Service Improvements.

A. After proper completion and dedication of the Utility Service Improvements to the District, the District shall provide continuous and adequate water service and sewer service to the Property, subject to all duly adopted rules and regulations of the District and payment of the following:

(1) all standard rates, fees and charges adopted by the District;

(2) all service investigation fees; and

(3) all connection fees.

B. It is understood and agreed by the parties that the obligation of the District to provide water service in the manner contemplated by this Contract is subject to the issuance of all permits, certificates, or approvals required to lawfully provide retail water service by the Texas Commission on Environmental Quality and all other governmental agencies having jurisdiction.

C. Without the prior approval of the District, the Developer shall not:

(1) construct or install additional water or sewer lines or facilities to service areas outside the Property;

(2) add any additional lands to the Property for which water or sewer service is to be provided pursuant to this Contract; or

(3) connect or serve any person or entity who, in turn, sells water or sewer service directly or indirectly to any other person or entity.

(4) By execution of this Contract, Developer acknowledges that the District's water distribution system provides potable water for domestic consumption and does also provide "fire flows" as defined by the Uniform Fire Code or similar code or regulation to fight structure fires.

11. Effect of Force Majeure

In the event either party is rendered unable by force majeure to carry out any of its obligations under this Contract, in whole or in part, then the obligations of that party, to the extent affected by the force majeure shall be suspended during the continuance of the inability, provided however, that due diligence is exercised to resume performance at the earliest practical time. As soon as reasonably possible after the occurrence of the force majeure relied upon to suspend performance, the party whose contractual obligations are affected thereby shall give notice and full particulars of the force majeure to the other party. The cause, as far as possible, shall be remedied with all reasonable diligence. The term "force majeure" includes acts of God, strikes, lockouts or other industrial disturbances, acts of the public enemy, orders of the government of the United States or the State of Texas or any civil or military authority, insurrections, riots, epidemics, landslides, lightening, earthquakes, fires, hurricanes, storms, floods, washouts, droughts, restraints of government and civil disturbances, explosions, breakage or accidents to equipment, pipelines or canals, partial or complete failure of water supply, and any other inabilities' of either party, whether similar to those enumerated or otherwise, that are not within the control of the party claiming the inability and that could not have been avoided by the exercise of due diligence and care. It is understood and agreed that the settlement of strikes and lockouts shall be entirely within the discretion of the party having the difficulty and that the requirement that any force majeure be remedied with all reasonable dispatch shall not require the settlement of strikes and lockouts by acceding to the demands of the opposing party if the settlement is unfavorable in the judgment of the party having the difficulty.

12. Notices

Any notice to be given hereunder by either party to the other party shall be in writing and may be effected by delivery in person or by facsimile, or by sending said notices by certified mail, return receipt requested, to the address set forth below. Notice shall be deemed given by mail when deposited with the United States Postal Service with sufficient postage affixed:

To: Crystal Clear Special Utility District
Attn: General Manager
2370 FM 1979
San Marcos, TX 78666

TO: Developer
Attn:

Either party may change the address for notice to it by giving written notice of such change in accordance with the provisions of this paragraph.

13. Breach of Contract and Remedies

A. If either party breaches any term or condition of this Contract, the non-breaching party may, at its sole option, provide the breaching party with notice of the breach within sixty (60) days of discovery of the breach by the non-breaching party. Upon its receipt of a notice of breach, the breaching party shall have sixty (60) days to cure the breach. If the breaching party does not cure the breach within the sixty (60) days, the non-breaching party shall have all rights and remedies at law and in equity including, without limitation, the right to enforce specific performance of this Contract by the breaching party and the right to perform the obligation in question and to seek restitution for all damages incurred in connection therewith.

B. Termination of this Contract by either party shall not affect any previous conveyance.

C. The rights and remedies granted in this Contract to the parties in the event of default are cumulative, and the exercise of such rights shall be without prejudice to the enforcement of any other right or remedy authorized by law or this Contract.

14. Indemnity

Developer shall indemnify and hold harmless the District and its officers, agents, representatives and employees from all suits, actions, losses, damages, claims or liability of any character, type or description, including without limiting the generality of the foregoing all expenses of litigation, court costs and attorney's fees, for injury or death to any person, or injury to any property, received or sustained by any person or persons or property, arising out of, or occasioned by, the acts of Developer or its agents, representatives or employees in connection with or related to the Development, the Utility Service Improvements or execution or performance of this Contract.

15. No Third Party Beneficiaries

This Contract is solely for the benefit of the parties hereto, and no other person has any right, interest or claim under this Contract.

16. Context

Whenever the context requires, the gender of all words herein shall include the masculine, feminine and neuter, and the number of all words shall include singular and plural.

17. Litigation Expenses

Either party to this Contract who is the prevailing party in any legal proceeding against the other party, brought in relation to this Contract, shall be entitled to recover court costs and reasonable attorneys' fees from the non-prevailing party.

18. Intent

The parties hereto covenant and agree that they shall execute and deliver such other and further instruments and documents as are, or may become, necessary or convenient to effectuate and carry out the intent of this Contract.

19. Authority

The signatories hereto represent and affirm that they have authority to execute this Contract on behalf of the respective parties hereto.

20. Severability

The provisions of this Contract are severable, and if any word, phrase, clause, sentence, paragraph, section, or other part of this Contract or the application thereof to any person or circumstance shall ever be held by any court of competent jurisdiction to be invalid or unconstitutional for any reason, the remainder of this Contract and the application of such word, phrase, clause, sentence, paragraph, section, or other party of this Contract to other persons or circumstances shall not be affected thereby and this Contract shall be construed as if such invalid or unconstitutional portion had never been contained therein.

21. Entire Agreement

This Contract, including any exhibits and/or addendums attached hereto and made a part hereof, constitutes the entire agreement between the parties relative to the subject matter of this Contract. All prior agreements, covenants, representations, or warranties, whether oral or in writing, between the parties are merged herein.

22. Amendment

No amendment of this Contract shall be effective unless and until it is duly approved by each party and reduced to a writing signed by the authorized representatives of the District and the Developer, respectively, which amendment shall incorporate this Contract in every particular not otherwise changed by the amendment.

23. Governing Law

This Contract shall be construed under and in accordance with the laws of the State of Texas and all obligations of the parties are expressly deemed performable in Guadalupe County, Texas.

24. Venue

Any action at law or in equity brought to enforce or interpret any provision of this Contract shall be brought in a state court of competent jurisdiction with venue in Guadalupe County, Texas.

25. Successors and Assigns

This Contract shall be binding on and shall inure to the benefit of the heirs, successors and assigns of the parties.

26. Assignability

The rights and obligations of the Developer hereunder may not be assigned without the prior written consent of the District.

27. Effective Date

This Contract shall be effective from and after the date of due execution by all parties.

IN WITNESS WHEREOF each of the parties has caused this Contract to be executed by its duly authorized representative in multiple copies, each of equal dignity, on the date or dates indicated below.

EXECUTED on this the _____ day of _____, 20___.

DEVELOPER

By: Name:

Title:

EXECUTED on this the _____ day of _____, 20___.
CRYSTAL CLEAR SPECIAL UTILITY DISTRICT
By:
General Manager:

<u>Non-Discrimination Statement</u>

"This institution is an equal Opportunity provider and employer. If you wish to file a Civil Rights program complaint of discrimination, complete the USDA Program Discrimination Complaint Form, found on line at http://www.ascr.usda.gov/complaint_filing_cust.html , or at any USDA office, or call (866) 632-9992 to request the form. You may also write a letter containing all of the information requested in the form. Send your completed complaint form or letter to us by mail at U.S. Department of Agriculture, Director, Office of Adjudication, 1400 Independence Avenue, S.W., Washington, D.C. 20250-9410, by fax (202) 690-7442, or email at program.intake@usda.gov."

NON-STANDARD SERVICE CONTRACT

(_____)

PRO-RATA FEE FORMULA

Acres in connecting applicant's development.

_____

Total potential acres served by *(x)* Actual cost of the *(=)* Pro-Rata Fee the Off-Site Facilities constructed Off-Site Facilities by Developer.

(less)

Total acres in the Development.

EXAMPLE:

100**(a)** (x) $50,000.00**(d)** (=) $12,500.00**(e)** 500**(b)** (-) 100**(c)**

Where:

- **(a)** = Acres in connecting applicant's new development.
- **(b)** = Total potential acres served by the Off-Site Facilities constructed by Developer as determined by the District's engineer.
- **(c)** = Total acres in the Development.
- **(d)** = Actual cost of the Off-Site Facilities.
- **(e)** = Pro-rata fee to be collected from any water service applicant that connects or desires to connect to the Off-Site Facilities.

AFTER RECORDING RETURN TO: Crystal Clear Special Utility District, 2370 FM 1979, San Marcos, TX 78666.

EASEMENT AND RIGHT-OF-WAY
(Including Temporary Easement for Construction)

STATE OF TEXAS §
§
County of _____ §

That _____ ("Grantor"), for and in consideration of TEN DOLLARS AND NO/100 ($10.00) and other good and valuable consideration paid to Grantor by Crystal Clear Special Utility District ("Grantee"), the receipt and sufficiency of which is hereby acknowledged, does hereby grant and convey unto Grantee, it successors and assigns, a permanent easement and right-of-way (the "Easement") to erect, construct, install, and lay and thereafter access and use, operate, inspect, repair, alter, protect, maintain, replace, upgrade, parallel, add and remove water distribution lines (the pipelines) and appurtenances, and any other any other actions necessary to provide service to Grantor's property as well as Grantee's current and future system-wide customers, (collectively, the "Improvements") under and across _____ acres of land, more particularly depicted and described in **Exhibit A** attached hereto and made a part hereof by reference as if fully set forth herein (the "Easement Property").

Grantor also grants and conveys unto Grantee a fifty foot (50') wide temporary construction easement, parallel to and twenty-five feet (25') on either side of the Easement Property for use in connection with the initial installation of the Improvements by Grantee, within the Easement Property and for the storage of excavation material resulting from such construction (the "Temporary Construction Easement"). The Temporary Construction Easement will expire upon completion of construction and acceptance of the Improvements by Grantee, but in no event later than _____.

Grantee shall have such other rights and benefits necessary and/or convenient for the full enjoyment and use of the rights herein granted, including without limitation: the reasonable right from time-to-time to remove any and all paving, trees and undergrowth, and other obstructions that injure the Improvements.

Grantor, its successors and assigns, may fully use and enjoy the Easement Property, except that such use and enjoyment shall not hinder conflict or interfere with the exercise of Grantee's rights hereunder and no building, structure or reservoir shall be constructed upon, over or across the Easement Property without Grantee's written consent; provided further that Grantor, its successors and assigns, may construct, dedicate and maintain over and across the Easement Property such driveways, aerial utility lines and fences as will not interfere with Grantee's use of the Easement for the permitted purposes. The installation of subsurface utility lines across the Easement is subject to Crystal Clear's prior written consent.

Grantee shall clean up and remove all trash and debris caused by the installation of the Improvements hereunder or Grantee's use of the Easement Property, and shall repair surface damages to the land caused by the installation of the Improvement or Grantee's use of the

Easement Property within a reasonable time not to exceed forty-five (45) days following completion and acceptance of the Improvements by Grantee. Grantee shall also restore the surface of the land to a smooth contour following said installation or use of the Easement Property, including the restoration of existing top soil or removal of soils created during construction by Grantee within a reasonable time not to exceed forty-five (45) days completion and acceptance of the Improvements by Grantee. During construction, Grantee shall install such fences, barricades or safety barriers as may be reasonably required to protect the public, livestock or adjacent property.

The consideration recited herein shall constitute payment in full for all damages sustained by Grantor by reason of the installation of the Improvements referred to herein, and Grantee will maintain the Easement Property in a state of good repair and efficiency so that no damages will result from its use to Grantor's premises. This agreement together with other provisions of this grant shall be perpetual and shall constitute a covenant running with the land for the benefit of Grantee, its successors and assigns. Grantee's rights hereunder may be assigned in whole or in part to one or more assignees.

TO HAVE AND TO HOLD the Easement and rights appurtenant thereto unto Grantee, its successors and assigns, until the Grantee declares the Improvements permanently abandoned by Grantee, in which event the Easement Property and rights appurtenant thereto shall cease and terminate and revert to Grantor.

Grantor does hereby bind itself, its successors and assigns, to WARRANT AND FOREVER DEFEND, all and singular, the Easement and rights appurtenant thereto herein granted to Grantee, or Grantee's successors and assigns, against every person whomsoever claiming, or to claim, the same or any part thereof.

It is expressly understood that all rights, conveyances or covenants are herein written, and no verbal agreements of any kind shall be binding or recognized or in any way modify this instrument of conveyance.

When the context requires, singular nouns and pronouns include the plural.

EXECUTED this ____ day of _____,

GRANTOR:

By: Name:

Title:

Date:

THE STATE OF TEXAS §
§
COUNTY OF _____ §

This instrument was acknowledged before on _____, 20_____, by _____, the _____ of _____, on behalf of and with authority of said entity.

_____
Notary Public, State of Texas

AFTER RECORDING RETURN TO: Crystal Clear Special Utility District 2370 FM 1979, San Marcos, TX 78666

Non-Discrimination Statement

"This institution is an equal Opportunity provider and employer. If you wish to file a Civil Rights program complaint of discrimination, complete the USDA Program Discrimination Complaint Form, found on line at http://www.ascr.usda.gov/complaint_filing_cust.html , or at any USDA office, or call (866) 632-9992 to request the form. You may also write a letter containing all of the information requested in the form. Send your completed complaint form or letter to us by mail at U.S. Department of Agriculture, Director, Office of Adjudication, 1400 Independence Avenue, S.W., Washington, D.C. 20250-9410, by fax (202) 690-7442, or email at program.intake@usda.gov."

APPENDIX C: Water Standard Details and Wastewater Standard Details

Date: Aug 03, 2017, 11:51am User ID: dswoboda
File: S:\Standards\DETAILS\CRYSTAL CLEAR SUD\Air Release Valve Detail.dwg

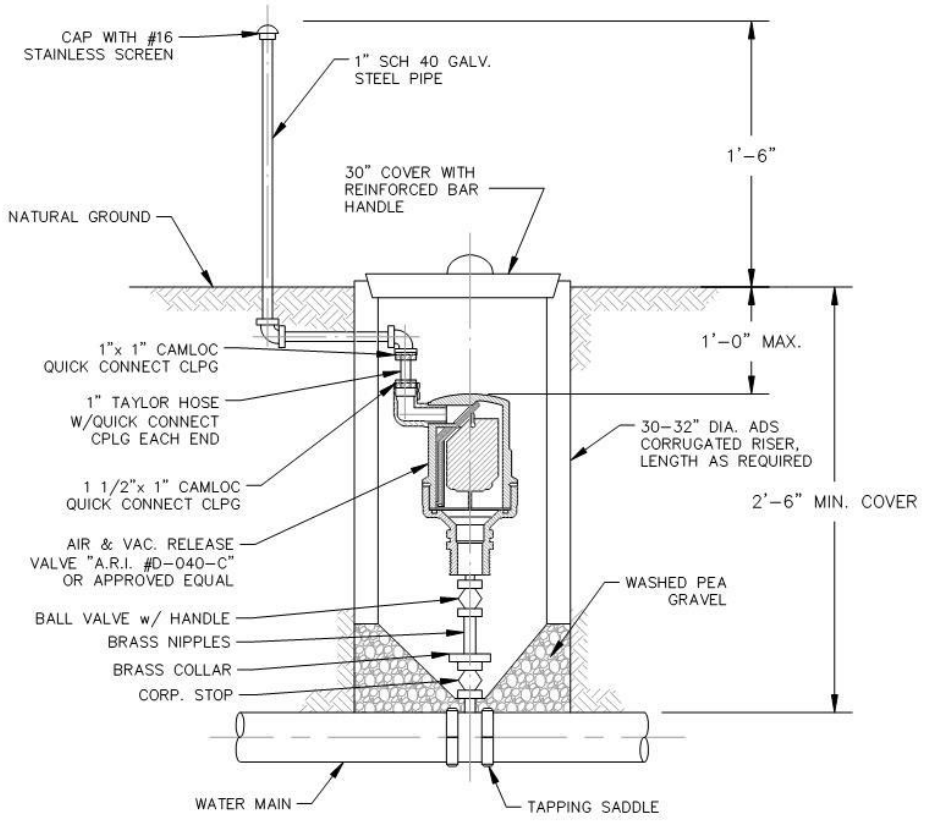

NOTE:
AIR RELEASE VALVE SHALL BE SET NEXT TO FENCE OR PROPERTY AND/OR R.O.W. LINE W/GALV. RISER PIPE IN FENCE LINE. AIR RELEASE VALVES SHALL BE INSTALLED AT OR NEAR HIGH POINTS IN THE WATER MAIN (SEE PLANS). TRAFFIC RATING UPON REQUEST.

NOT TO SCALE

PROPERTY OF CRYSTAL CLEAR SPECIAL UTILITY DISTRICT	AIR RELEASE VALVE DETAIL	M & S ENGINEERING, L.L.C. ENGINEERS, PLANNERS, AND SURVEYORS TEXAS REGISTERED ENGINEERING FIRM F-1284	APPROVED	REVISION
			JUNE 2015	APRIL 2017
			SHEET 1 OF 1	

Date: Aug 04, 2017, 7:41am User ID: dswoboda
File: S:\Standards\DETAILS\CRYSTAL CLEAR SUD\Service Details.dwg

MATERIAL LIST
A. 3/4" SERVICE SADDLE FORD #S71
B. 3/4" CORP. STOP (I.P. x COMP) FORD #F-1100-3G
C. 3/4" POLYETHYLENE (OR COPPER) AWWA, C901-200 PSI
D. PLASTIC METER BOX, MODEL NO. DFW1300.12.1C OR DFW1600X.12.1C
E. METER BOX LID, MODEL NO. DFW1200.1C.LID OR DFW1500.1C.LID
F. 3/4" BALL VALVE (METER CONV. x COMP.) FORD #BA43-332W-G-NL
G. 5/8"x3/4" WATER METER (BY OWNER)
H. 3/4" DUAL CHECK VALVE (METER x I.P.) FORD #HHC31-323
I. SERVICE LINE (BY CCSUD.)
J. CUSTOMER SHUT OFF VALVE (BY CCSUD.) FORD #644-333-NL
K. 7-INCH ROUND VALVE BOX WITH REMOVABLE LID

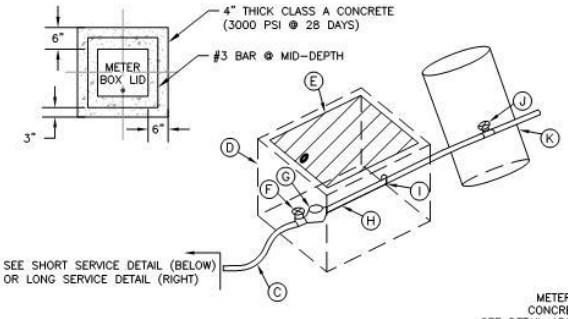

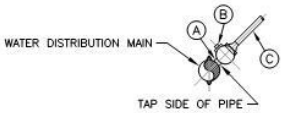

SHORT SERVICE DETAIL
N.T.S.

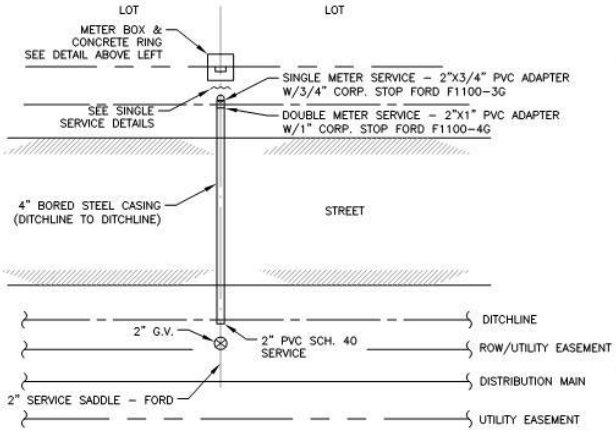

LONG SERVICE DETAIL
N.T.S.

SINGLE SERVICE DETAILS
N.T.S.

NOT TO SCALE

PROPERTY OF CRYSTAL CLEAR SPECIAL UTILITY DISTRICT	SERVICE CONNECTION DETAILS	M & S ENGINEERING, L.L.C. ENGINEERS, PLANNERS, AND SURVEYORS TEXAS REGISTERED ENGINEERING FIRM F-1394	APPROVED	REVISION
			JUNE 2015	JULY 2017
			SHEET 1 OF 1	

Date: Apr 06, 2017, 8:13am User ID: gsharp
File: S:\Standards\DETAILS\CRYSTAL CLEAR SUD\Casing Detail.dwg

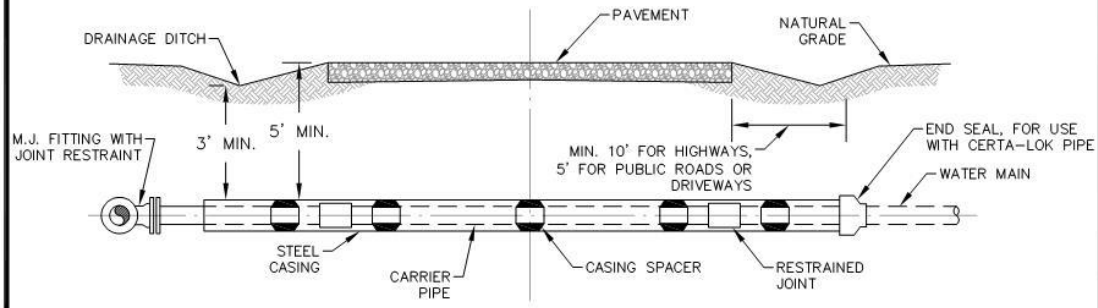

CARRIER PIPE			STEEL CASING				
NOMINAL SIZE (IN)	PIPE OUTSIDE DIAMETER (IN)	RESTRAINT OUTSIDE DIA. (IN)	MIN. NOMINAL SIZE(IN)	OUTSIDE DIAMETER (IN)	INSIDE DIAMETER (IN)	WALL THICKNESS (IN)	WEIGHT CLASS
4	4.80	9.25	10	10.750	10.25	0.25	STANDARD
6	6.90	11.25	12	12.750	12.250	0.375	STANDARD
8	9.05	14.75	16	16.000	13.150	0.375	STANDARD
12	13.20	16.90	20	20.000	19.150	0.375	STANDARD
16	17.40	25.51	30	30.000	29.250	0.375	

*CARRIER PIPE VALUES BASED ON CERTA-LOK C900/RJ (DR 18), RESTRAINED JOINT PVC PIPE FOR 12" AND SMALLER CARRIER PIPE AND CERTA-LOK C905RJ (DR 18) RESTRAINED JOINT PVC PIPE FOR 16" CARRIER PIPE.
**STEEL CASING SHALL BE STANDARD WEIGHT OR HEAVIER PIPE CONFORMING TO ASTM A-36, ASTM A-568, ASTM A-135, ASTM A-139 OR OTHER ACCEPTABLE STANDARD SPECIFICATION. PIPE SHALL BE COATED AND LINED IN ACCORDANCE WITH AWWA C-210 OR APPROVED EQUAL. PIPE JOINTS SHALL BE WELDED IN ACCORDANCE WITH AWWA C-206. STEEL CASING SHALL BE NEW OR USED IN GOOD CONDITION ACCEPTABLE TO CRYSTAL CLEAR SPECIAL UTILITY DISTRICT AND TO THE ROADWAY AUTHORITY.
***CASING SPACERS ARE REQUIRED FOR ALL LINES 4 INCH AND LARGER. NUMBER AND LOCATION OF CASING SPACERS PER JOINT AND ONE CASING SPACER PLACED WITHIN 2 FT. OF ENDS OF CASING.

NOT TO SCALE

PROPERTY OF
CRYSTAL CLEAR SPECIAL UTILITY DISTRICT

CASING DETAIL

M & S ENGINEERING, L.L.C.
ENGINEERS, PLANNERS, AND SURVEYORS
TEXAS REGISTERED ENGINEERING FIRM F-1394

APPROVED	REVISION
JUNE 2015	JUNE 2015

SHEET 1 OF 1

Date: Aug 04, 2017, 9:13am User ID: dswoboda
File: S:\Standards\DETAILS\CRYSTAL CLEAR SUD\Flush Valve Detail 4in or Smaller.dwg

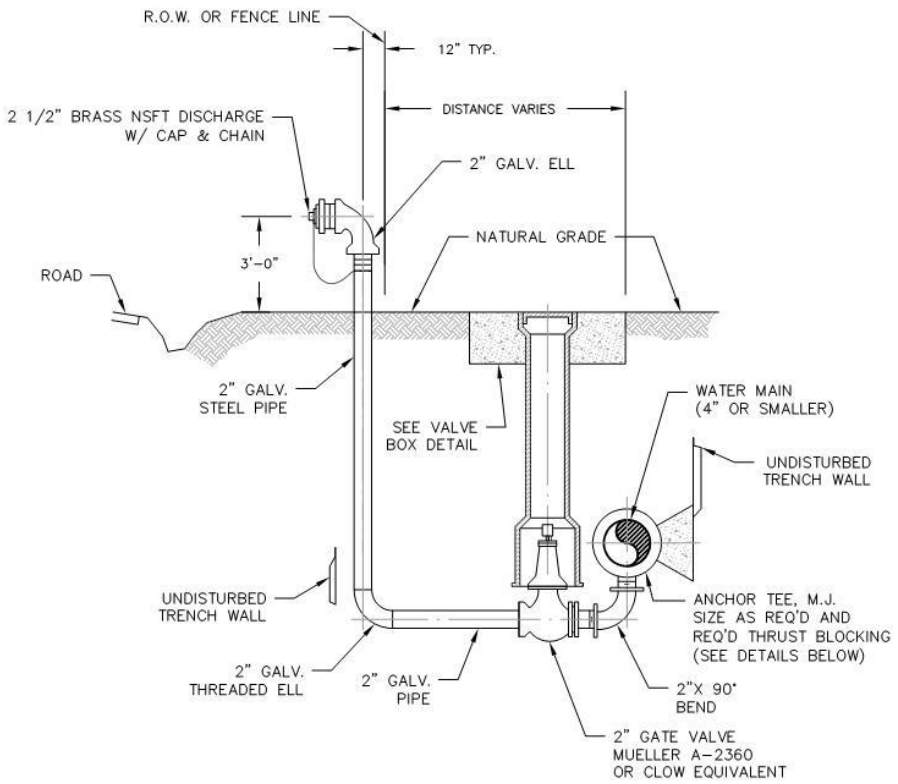

NOTES:

1. BURIED PIPING SHALL BE WRAPPED IN POLYWRAP.

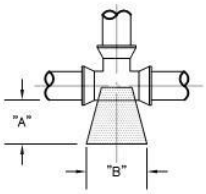

PIPE SIZE	DIMENSION "B" (SQUARE)				
	PLUGS & TEES	90° BENDS	45° BENDS	22 1/2° BENDS	VALVES
4"&6"	1'-3"	1'-6"	1'-0"	9"	1'-3"
8"	1'-9"	2'-0"	1'-6"	1'-0"	1'-6"
10"	2'-10"	2'-0"	1'-9"	1'-3"	2'-0"
12"	2'-6"	3'-0"	2'-3"	1'-6"	2'-3"
16"	3'-3"	4'-0"	2'-9"	2'-0"	2'-9"
20"	3'-9"	4'-6"	3'-3"	2'-3"	3'-3"

DIMENSION "A" SHALL BE A MINIMUM OF 1'-0" BUT IS TO BE INCREASED WHERE NECESSARY TO PROVIDE BEARING AGAINST UNDISTURBED TRENCH WALL.

NOTE:

1. THE EARTHBEARING SURFACE SHALL BE THE UNDISTURBED TRENCH WALL.
2. ALL PIPE JOINTS SHALL BE KEPT FREE FROM CONCRETE.
3. ALL THRUST BLOCKS SHALL CONTAIN A MINIMUM OF 1 1/2 CUBIC YARDS OF CONCRETE.
4. CONCRETE SHALL BE 2000 P.S.I. AT 28 DAYS MINIMUM.
5. ALL FITTINGS AND FITTING JOINTS MUST BE WRAPPED W/ THREE LAYERS OF 8-MIL POLYETHYLENE IN ACCORDANCE WITH AWWA C105.
6. 12"x12"x4" THICK CONCRETE BLOCKS SHALL BE INSTALLED DIRECTLY UNDER ALL VALVES, FITTINGS, ETC.

NOT TO SCALE

PROPERTY OF
CRYSTAL CLEAR SPECIAL UTILITY DISTRICT

FLUSH VALVE DETAIL
4 INCH OR SMALLER

M & S ENGINEERING, L.L.C.
ENGINEERS, PLANNERS, AND SURVEYORS
TEXAS REGISTERED ENGINEERING FIRM F-1384

APPROVED	REVISION
JUNE 2015	APRIL 2017

SHEET 1 OF 1

Date: Aug 04, 2017, 9:12am User ID: dswoboda
File: S:\Standards\DETAILS\CRYSTAL CLEAR SUD\Flush Valve Detail 6in or Larger.dwg

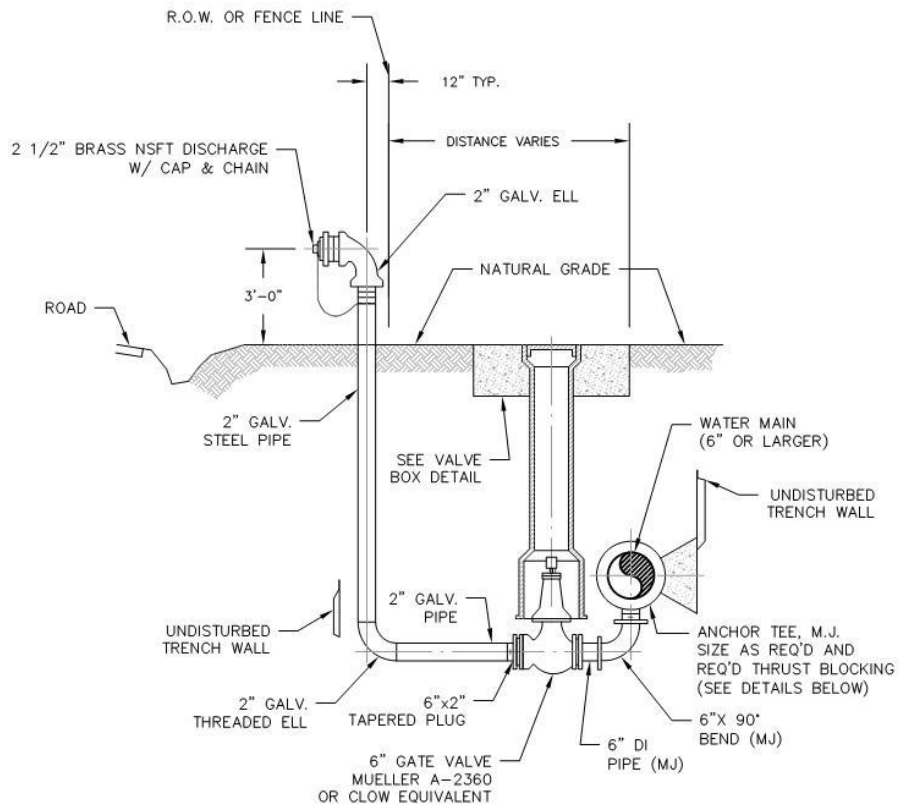

NOTES:

1. BURIED PIPING SHALL BE WRAPPED IN POLYWRAP.

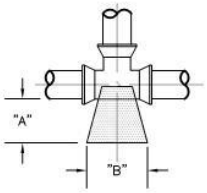

PIPE SIZE	DIMENSION "B" (SQUARE)				
	PLUGS & TEES	90° BENDS	45° BENDS	22 1/2° BENDS	VALVES
4"&6"	1'-3"	1'-6"	1'-0"	9"	1'-3"
8"	1'-9"	2'-0"	1'-6"	1'-0"	1'-6"
10"	2'-10"	2'-0"	1'-9"	1'-3"	2'-0"
12"	2'-6"	3'-0"	2'-3"	1'-6"	2'-3"
16"	3'-3"	4'-0"	2'-9"	2'-0"	2'-9"
20"	3'-9"	4'-6"	3'-3"	2'-3"	3'-3"

DIMENSION "A" SHALL BE A MINIMUM OF 1'-0" BUT IS TO BE INCREASED WHERE NECESSARY TO PROVIDE BEARING AGAINST UNDISTURBED TRENCH WALL.

NOTE:

1. THE EARTHBEARING SURFACE SHALL BE THE UNDISTURBED TRENCH WALL.
2. ALL PIPE JOINTS SHALL BE KEPT FREE FROM CONCRETE.
3. ALL THRUST BLOCKS SHALL CONTAIN A MINIMUM OF 1 1/2 CUBIC YARDS OF CONCRETE.
4. CONCRETE SHALL BE 2000 P.S.I. AT 28 DAYS MINIMUM.
5. ALL FITTINGS AND FITTING JOINTS MUST BE WRAPPED W/ THREE LAYERS OF 8-MIL POLYETHYLENE IN ACCORDANCE WITH AWWA C105.
6. 12"x12"x4" THICK CONCRETE BLOCKS SHALL BE INSTALLED DIRECTLY UNDER ALL VALVES, FITTINGS, ETC.

NOT TO SCALE

PROPERTY OF
CRYSTAL CLEAR SPECIAL UTILITY DISTRICT

FLUSH VALVE DETAIL
6 INCH OR LARGER

M & S ENGINEERING, L.L.C.
ENGINEERS, PLANNERS, AND SURVEYORS
TEXAS REGISTERED ENGINEERING FIRM F-1384

APPROVED	REVISION
JUNE 2015	APRIL 2017

SHEET 1 OF 1

Date: Aug 04, 2017, 9:12am User ID: dswoboda
File: S:\Standards\DETAILS\CRYSTAL CLEAR SUD\Flush Valve Detail 6in or Larger.dwg

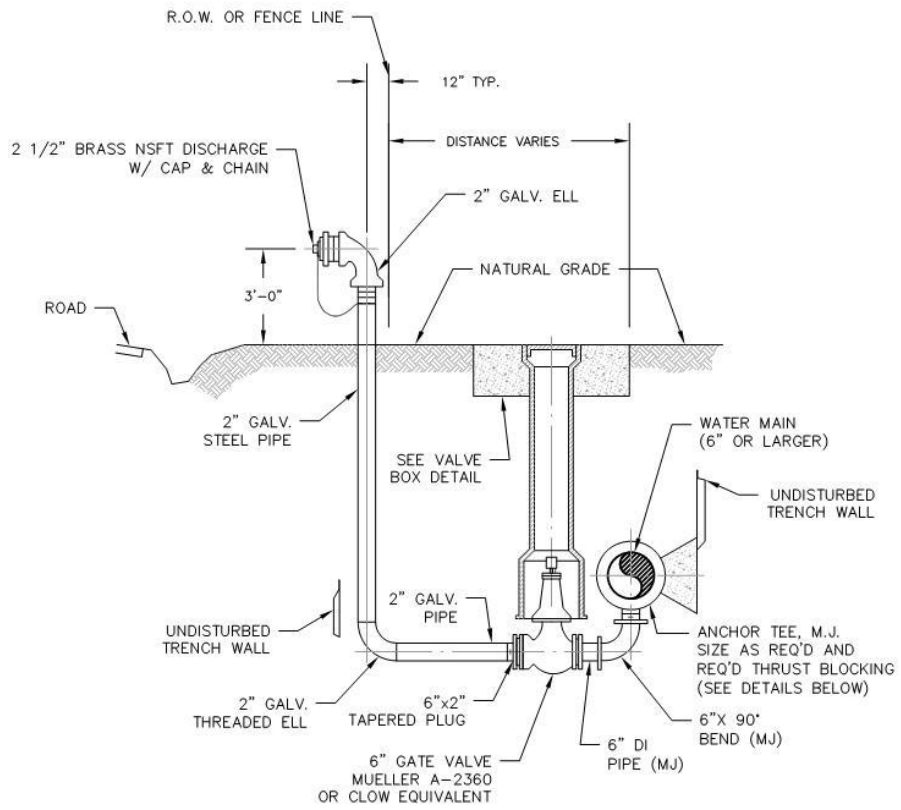

NOTES:

1. BURIED PIPING SHALL BE WRAPPED IN POLYWRAP.

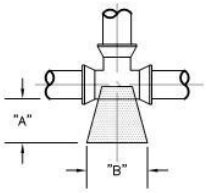

PIPE SIZE	DIMENSION "B" (SQUARE)				
	PLUGS & TEES	90° BENDS	45° BENDS	22 1/2° BENDS	VALVES
4"&6"	1'-3"	1'-6"	1'-0"	9"	1'-3"
8"	1'-9"	2'-0"	1'-6"	1'-0"	1'-6"
10"	2'-10"	2'-0"	1'-9"	1'-3"	2'-0"
12"	2'-6"	3'-0"	2'-3"	1'-6"	2'-3"
16"	3'-3"	4'-0"	2'-9"	2'-0"	2'-9"
20"	3'-9"	4'-6"	3'-3"	2'-3"	3'-3"

DIMENSION "A" SHALL BE A MINIMUM OF 1'-0" BUT IS TO BE INCREASED WHERE NECESSARY TO PROVIDE BEARING AGAINST UNDISTURBED TRENCH WALL.

NOTE:

1. THE EARTHBEARING SURFACE SHALL BE THE UNDISTURBED TRENCH WALL.
2. ALL PIPE JOINTS SHALL BE KEPT FREE FROM CONCRETE.
3. ALL THRUST BLOCKS SHALL CONTAIN A MINIMUM OF 1 1/2 CUBIC YARDS OF CONCRETE.
4. CONCRETE SHALL BE 2000 P.S.I. AT 28 DAYS MINIMUM.
5. ALL FITTINGS AND FITTING JOINTS MUST BE WRAPPED W/ THREE LAYERS OF 8-MIL POLYETHYLENE IN ACCORDANCE WITH AWWA C105.
6. 12"x12"x4" THICK CONCRETE BLOCKS SHALL BE INSTALLED DIRECTLY UNDER ALL VALVES, FITTINGS, ETC.

NOT TO SCALE

PROPERTY OF
CRYSTAL CLEAR SPECIAL UTILITY DISTRICT

FLUSH VALVE DETAIL
6 INCH OR LARGER

M & S ENGINEERING, L.L.C.
ENGINEERS, PLANNERS, AND SURVEYORS
TEXAS REGISTERED ENGINEERING FIRM F-1384

APPROVED	REVISION
JUNE 2015	APRIL 2017

SHEET 1 OF 1

Date: Jun 03, 2015, 2:06pm User ID: gshcrp
File: S:\Standards\DETAILS\CRYSTAL CLEAR SUD\Marker Details.dwg

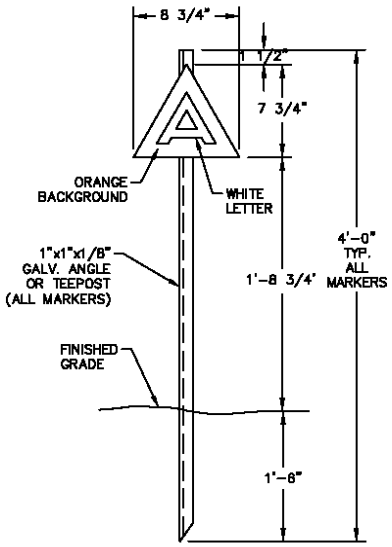

AIR VENT

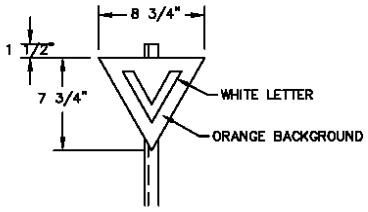

VALVE

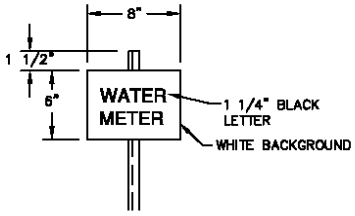

WATER METER

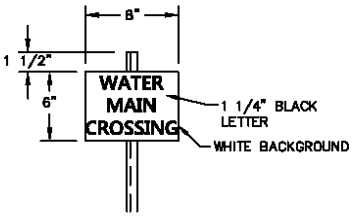

CROSSING

NOTE:

1. MARKERS SHALL BE MADE OF 20GA. STEEL w/BAKED ENAMEL FINISH SIMILAR TO THOSE MANUFACTURED BY RURAL WATER SPECIALTY CO., TULSA OK., MODEL 1002 FOR WATER LINE MARKERS & MODEL 1001 FOR AIR RELEASE MARKERS & MODEL 1000 FOR VALVE MARKERS.

2. MARKERS SHALL BE PLACED AT ALL GATE VALVES, FLUSHING VALVES, AIR RELEASE VALUES, & WATER METERS.

3. PIPELINE MARKERS SHALL BE PLACED ON R.O.W./FENCE LINE AT ALL ROAD CROSSINGS.

4. PLASTIC OR PLEXIGLASS MARKERS MAY NOT BE SUBSTITUTED FOR STEEL.

NOT TO SCALE

PROPERTY OF CRYSTAL CLEAR SPECIAL UTILITY DISTRICT	MARKER DETAILS	M & S ENGINEERING, L.L.C. ENGINEERS, PLANNERS, AND SURVEYORS	APPROVED	REVISION
			JUNE 2015	JUNE 2015
			SHEET 1 OF 1	

Date: Jul 21, 2017, 8:18am User ID: cparker
File: S:\Standards\DETAILS\CRYSTAL CLEAR SUD\Typ Rd_Driveway Backfill.dwg

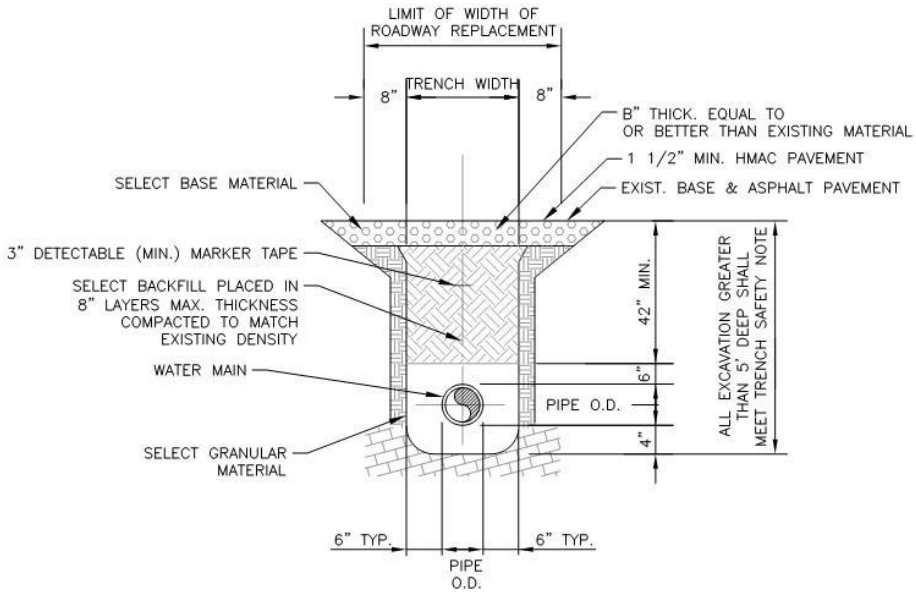

TRENCHING NOTES

1. ADEQUATE BARRICADES & WARNING SIGNS SHALL BE ERECTED BEFORE ANY WORK IS STARTED IN PUBLIC RIGHT-OF-WAY.
2. THE ROADWAY SHALL BE CUT ONLY WHERE REQUIRED BY THE ENGINEER.
3. NO MORE THAN HALF OF THE WIDTH OF THE ROAD SHALL BE CUT & OPENED AT ONE TIME.
4. REFER TO SPECIFICATIONS FOR ANY SPECIAL REQUIREMENTS OR CONDITIONS
5. BACKFILL SHALL BE COMPLETED IMMEDIATELY AFTER PIPELINE LAYING WITHIN PUBLIC RIGHT-OF-WAYS OR CROSSING PUBLIC RIGHT-OF-WAYS & PRIVATE DRIVEWAYS.

TRENCH SAFETY NOTES

1. TRENCH SAFETY SYSTEM, SHORING OR SIDE SLOPE TO BE IN ACCORDANCE WITH OSHA STANDARDS.
2. TRENCH SAFETY SYSTEM PLAN TO BE PROVIDED BY CONTRACTOR PRIOR TO CONSTRUCTION.

NOT TO SCALE

PROPERTY OF CRYSTAL CLEAR SPECIAL UTILITY DISTRICT	TYPICAL ROAD AND DRIVEWAY BACKFILL DETAILS	M & S ENGINEERING, L.L.C. ENGINEERS, PLANNERS, AND SURVEYORS TEXAS REGISTERED ENGINEERING FIRM F-1384	APPROVED	REVISION
			JUNE 2015	JUNE 2015
			SHEET 1 OF 1	

Date: Aug 04, 2017, 8:21am User ID: dswoboda
File: S:\Standards\DETAILS\CRYSTAL CLEAR SUD\Typ Trench Backfill.dwg

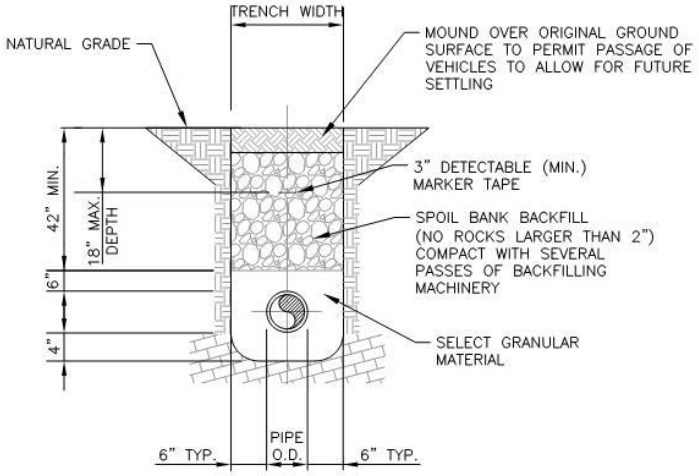

TRENCHING NOTES

1. ADEQUATE BARRICADES & WARNING SIGNS SHALL BE ERECTED BEFORE ANY WORK IS STARTED IN PUBLIC RIGHT-OF-WAY.
2. REFER TO SPECIFICATIONS FOR ANY SPECIAL REQUIREMENTS OR CONDITIONS
3. BACKFILL SHALL BE COMPLETED IMMEDIATELY AFTER PIPELINE LAYING WITHIN PUBLIC RIGHT-OF-WAYS OR CROSSING PUBLIC RIGHT-OF-WAYS & PRIVATE DRIVEWAYS.

TRENCH SAFETY NOTES

1. TRENCH SAFETY SYSTEM, SHORING OR SIDE SLOPE TO BE IN ACCORDANCE WITH OSHA STANDARDS.
2. TRENCH SAFETY SYSTEM PLAN TO BE PROVIDED BY CONTRACTOR PRIOR TO CONSTRUCTION.

NOT TO SCALE

PROPERTY OF CRYSTAL CLEAR SPECIAL UTILITY DISTRICT	TYPICAL TRENCH BACKFILL DETAIL	M & S ENGINEERING, L.L.C. ENGINEERS, PLANNERS, AND SURVEYORS TEXAS REGISTERED ENGINEERING FIRM F-1384	APPROVED	REVISION
			JUNE 2015	APRIL 2017
			SHEET 1 OF 1	

GENERAL NOTES

1. THE INSTALLER SHALL FOLLOW THE REQUIREMENTS FOR TEMPORARY AND PERMANENT EROSION AND SEDIMENTATION CONTROLS, INSPECTION AND MAINTENANCE PROCEDURES LISTED IN THE NATIONAL POLLUTANT DISCHARGE ELIMINATION SYSTEM STORMWATER POLLUTION PREVENTION PLAN.
2. THE INSTALLER AND ALL SUBCONTRACTORS SHALL COMPLETE THE POLLUTION PLAN CERTIFICATION.
3. A COPY OF THE POLLUTION PREVENTION PLAN SHALL BE KEPT AT THE CONSTRUCTION SITE FROM THE TIME CONSTRUCTION BEGINS UNTIL THE SITE IS FINALLY STABILIZED.
4. INSPECTION AND MAINTENANCE FORMS SHALL BE COMPLETED AS REQUIRED IN THE POLLUTION PLAN.
5. THE STORM WATER POLLUTION PREVENTION PLAN AND ALL OTHER RECORDS REQUIRED BY THE PERMIT SHALL BE RETAINED FOR THREE YEARS AFTER COMPLETION OF FINAL SITE STABILIZATION.
6. THE POLLUTION PREVENTION PLAN AND ASSOCIATED RECORDS MUST BE MADE AVAILABLE UPON REQUEST TO THE EPA'S DIRECTOR, OR ANY STATE OR LOCAL AGENCY WHO IS APPROVING EROSION AND SEDIMENTATION CONTROL PLANS AND TO THE OWNER AND ENGINEER.

GENERAL NOTES

1. STEEL POSTS WHICH SUPPORT THE SILT FENCE SHALL BE INSTALLED ON A SLIGHT ANGLE TOWARD THE ANTICIPATED RUNOFF SOURCE. POST MUST BE IMBEDDED A MINIMUM OF ONE FOOT.
2. THE TOE OF THE SILT FENCE SHALL BE TRENCHED IN WITH A SPACE OR MECHANICAL TRENCHER SO THAT THE DOWN SLOPE FACE OF THE TRENCH IS FLAT AND PERPENDICULAR TO THE LINE OF FLOW. WHERE FENCE CANNOT BE TRENCHED IN (E.G. PAVEMENT). WEIGHT FABRIC FLAP WITH WASHED GRAVEL ON UPHILL SIDE TO PREVENT FLOW UNDER FENCE.
3. THE TRENCH MUST BE A MINIMUM OF 6 INCHES WIDE TO ALLOW FOR THE SILT FENCE FABRIC TO BE LAID IN THE GROUND AND BACKFILLED WITH COMPACTED MATERIAL.
4. SILT FENCE SHOULD BE SECURELY FASTENED TO EACH STEEL SUPPORT POST OR TO WOVEN WIRE, WHICH IS IN TURN ATTACHED TO THE STEEL FENCE POST.
5. INSPECTION SHALL BE MADE WEEKLY OR AFTER EACH RAINFALL EVENT AND REPAIR OR REPLACEMENT SHALL BE MADE PROMPTLY AS NEEDED.
6. SILT FENCE SHALL BE REMOVED WHEN THE SITE IS COMPLETELY STABILIZED SO AS NOT TO BLOCK OR IMPEDE STORM FLOW OR DRAINAGE.
7. ACCUMULATED SILT SHALL BE REMOVED WHEN IT REACHES A DEPTH OF 6 INCHES. THE SILT SHALL BE DISPOSED OF IN AN APPROVED SITE AND IN SUCH A MANNER AS NOT TO CONTRIBUTE TO ADDITIONAL SILTATION.

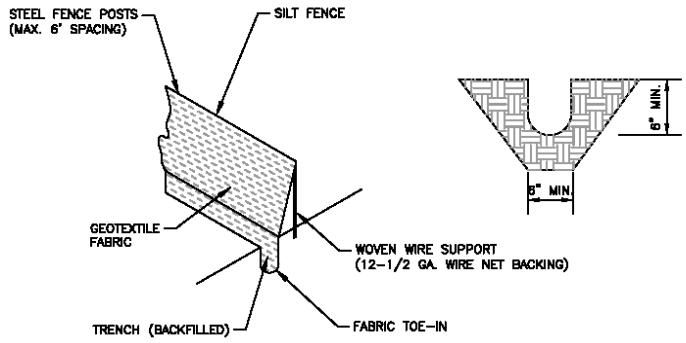

NOT TO SCALE

PROPERTY OF CRYSTAL CLEAR SPECIAL UTILITY DISTRICT	SILT FENCE DETAILS	M & S ENGINEERING, L.L.C. ENGINEERS, PLANNERS, AND SURVEYORS TBPE FIRM F-1284	APPROVED	REVISION
			JUNE 2015	JUNE 2015
			SHEET 1 OF 1	

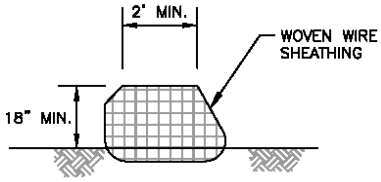

CROSS–SECTION

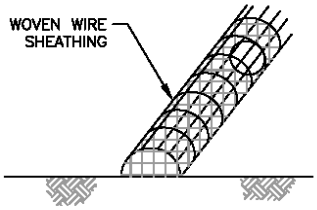

ISOMETRIC

GENERAL NOTES

1. USE ONLY OPEN GRADED ROCK 4–8 INCH DIAMETER FOR STREAM FLOW CONDITIONS. USE OPEN GRADED ROCK 3–5 INCH DIAMETER FOR OTHER CONDITIONS.
2. THE ROCK BERM SHALL BE SECURED WITH A WOVEN WIRE SHEATHING HAVING MAXIMUM 1 INCH OPENING AND MINIMUM WIRE DIAMETER OF 20 GAUGE.
3. THE ROCK BERM SHALL BE INSPECTED WEEKLY OR AFTER EACH RAIN, AND THE STONE AND/OR FABRIC CORE–WOVEN WIRE SHEATHING SHALL BE REPLACED WHEN THE STRUCTURE CEASES TO FUNCTION AS INTENDED, DUE TO SILT ACCUMULATION AMONG THE ROCKS, WASHOUT, CONSTRUCTION TRAFFIC DAMAGE, ETC.
4. WHEN SILT REACHES A DEPTH EQUAL TO ONE–THIRD THE HEIGHT OF THE BERM OR ONE FOOT, WHICHEVER IS LESS, THE SILT SHALL BE REMOVED AND DISPOSED OF IN APPROVED SITE AND IN A MANNER AS TO NOT CREATE A SILTATION PROBLEM.
5. DAILY INSPECTION SHALL BE MADE ON SEVERE SERVICE ROCK BERMS. SILT SHALL BE REMOVED WHEN ACCUMULATION REACHES 6 INCHES.
6. WHEN THE SITE IS COMPLETELY STABILIZED, THE BERM AND ACCUMULATED SILT SHALL BE REMOVED AND DISPOSED OF IN AN APPROVED MANNER.

NOT TO SCALE

PROPERTY OF CRYSTAL CLEAR SPECIAL UTILITY DISTRICT	ROCK BERM DETAILS	M & S ENGINEERING, L.L.C. ENGINEERS, PLANNERS, AND SURVEYORS TBPE FIRM F-1284	APPROVED	REVISION
			JUNE 2015	JUNE 2015
			SHEET 1 OF 1	

Changing the Way the World Does Wastewater®

Orenco Sewer Equipment Specifications

Table of Contents

EFFLUENT SEWER SPECIFICATIONS

PART 1 GENERAL

1.01 DEFINITIONS

A. Wherever used in these specifications and printed with initial bold capital letters, the terms listed below will have the meanings indicated which are applicable to both the singular and plural thereof.

1. *Bid* – The offer or proposal of a Bidder submitted on the prescribed form setting forth the prices for the work to be performed.
2. *Bidder* – The individual or entity who submits a Bid directly to the Owner.
3. *Contractor* – The individual or entity with whom Owner has entered into the agreement.
4. *Engineer* – The individual or entity named as such in the agreement.
5. *Inspector* - The specific individual designated by the Owner, Engineer, Contractor, and Manufacturer to ensure quality control by inspecting and certifying that each STEP/STEG unit is in compliance with the Manufacturer's recommendations and requirements.
6. *Manufacturer* – A supplier, fabricator, distributor, materialman, or vendor having a direct contract with Contractor or Owner to furnish materials or equipment to be incorporated in the work by contractor.
7. *Owner* – The individual or entity with whom Contractor has entered into the agreement and for whom the work is to be performed.

1.02 GENERAL DESCRIPTION

The **MANUFACTURER** shall furnish a complete factory built and tested STEP pump package(s), each consisting of a pump vault, effluent screen, discharge assembly, anti-siphon valve, ball valve, check valve, splice box, and controls.

1.03 SUBMITTALS

The **MANUFACTURER** shall furnish six (6) sets of shop drawings and technical data sheets. The submittals shall clearly specify the materials of construction, equipment compatibility, along with drawings for each unique package being supplied.

1.04 OR-EQUAL EVALUATIONS

A. Throughout the equipment specifications you will find the term "or approved equal." For this project, this term "approved equal" shall mean equal in the judgment of the **ENGINEER**. Should the **CONTRACTOR** seek approval of a product other than the brand or brands named in the specifications, it shall furnish written evidence that such product conforms in all respects to the specified requirements, and that it has been used successfully elsewhere under similar conditions. It will not be the responsibility of the **ENGINEER** to research, review, or determine equality, nor the responsibility of the **MANUFACTURER** specified within these specifications to provide research, documentation, or data supporting the difference between the "or equal" and the specified product. This will be the sole responsibility of the **CONTRACTOR** seeking the approval.

B. Where the specified requirements involve conformance to recognized codes or standards, the **BIDDER** shall furnish evidence of such conformance in the form of test or inspection reports, prepared by a recognized agency, and bearing an authorized signature. Manufacturer's standard data and catalog cut sheets will not be considered sufficient in themselves, and the

ENGINEER will not be responsible for seeking further data from the manufacturer, or for otherwise researching the product. Failure to provide complete data will be cause for rejection of the product. The submission shall include any impacts that could be expected from the alternative product and shall also indicate any product that would require a license or royalty, the actual fees, and a note that these fees would be handled by the **BIDDER**. The **BIDDER** shall provide submissions; meeting the above parameters no less than TWO WEEKS prior to **BID** opening for review by the **ENGINEER**. **CONTRACTORS** seeking approval of "or equal" products or systems shall provide, at minimum, the following.

C. Product/System submittals, including, but not limited to;

The number of years the **MANUFACTURER** has been in business of manufacturing relevant products/systems.

a. Size of company, including
    1) Number of employees related to relevant products/systems
    2) Number of engineers on staff related to relevant products/systems
b. Product specifications and a detailed description of how each product or component is "equal" to the specified product, system, or component. A side by side comparison is required.
    1) Equipment/system warranty along with exclusions
    2) Performance claims, including, but not limited to;
        a) Effluent filter design
            - Flow area
            - Surface area
            - Maintenance frequency
        b) Pump motor description
            - Manufacturer and origin
            - Length of service
            - Number of units in operation
            - Life-cycle cost (repair and replacement frequency)
            - Warranty
        c) Pump liquid end description
            - Manufacturer and origin
            - Length of service
            - Number of units in operation
            - Life-cycle cost (repair and replacement frequency and cost). Note liquid ends must be removeable, repairable, and cleanable.
            - Warranty
        d) Corrosion resistance
        e) Pump Lead description
            - Lead must be SOOW, extra heavy duty cord (600V) CSA approved.
        f) Control panel components
            - Manufacturer and origin
            - Length of service
            - Number of units in operation
            - Warranty
            - Enclosure description
c. Evidence of successfully obtaining approval for a system with similar permit requirements with the regulating authority
d. Summary of product/system track record and history, including, but not limited to;

1) Number of similarly sized systems
2) Detailed summary of, at minimum, ten (10) similarly sized systems, at least five (5) years old, including, but not limited to;
    - Project name, location, and application
    - Years in operation
    - Current average daily flows and design flows
    - Operator name and contact information

1. **BIDDER** shall specify and furnish documentation related to manufacturer (or representative) support services, including, but not limited to;
    1) Installation training program and support material
    2) Installation oversight program and support material
    3) Operator training program and support material
    4) Startup services program and support material

D. Engineer's Cost Reimbursement: **ENGINEER** will record Engineer's costs in evaluating a substitue or "or equal" proposed or submitted by **CONTRACTOR**. Whether or not **ENGINEER** approves an "or equal" or substitute so proposed or submitted by Contractor, Contractor shall reimburse Owner for the reasonable charges of **ENGINEER** for evaluating each proposed "or equal" or substitute. **CONTRACTOR** shall reimburse Owner for the reasonable charges of **ENGINEER** for making changes in the Contract Documents (or in the provisions of any other direct contract with Owner) resulting from the acceptance of each proposed "or equal" or substitute.

E. **CONTRACTOR** may not knowingly contract with a supplier or manufacturer if the individual or entity who prepared the plans and specifications has a corporate or financial affiliation with the supplier or manufacturer. Owner's officers, employees, or agents shall not engage in the award or administration of this Contract if a conflict of interest, real or apparent, would be involved. Such a conflict would arise when: (i) the employee, officer or agent; (ii) any member of their immediate family; (iii) their partner or (iv) an organization that employs, or is about to employ, any of the above, has a financial interest in **CONTRACTOR** . Owner's officers, employees, or agents shall neither solicit nor accept gratuities, favors or anything of monetary value from **CONTRACTOR** or subcontractors.

F. During the bidding process, any approved "or equal" or substitute shall be accepted by the **ENGINEER** and released in as an addendum to the Contract Documents.

1.05 EXPERIENCE CLAUSE

The equipment furnished shall be manufactured and supplied by a company experienced in the design and manufacture of effluent sewer systems. **MANUFACTURERS** shall have at minimum ten (10) years experience in the design and manufacture of effluent sewers systems of similar size and equipment specified. **MANUFACTURERS** shall have at minimum of twenty-five (25) successful installations of effluent sewer systems, with each installation having a minimum of ten (10) pumps discharging into a common force main.

1.06 MANUFACTURER

The **MANUFACTURER** shall be Orenco Systems®, Inc. or approved equal. The **MANUFACTURER** shall furnish a complete factory built STEP pump package(s), each consisting of a pump vault, effluent screen, discharge assembly, anti-siphon valve, ball valve, check valve, splice box, and controls. The **MANUFACTURER** shall supply detailed installation and O&M instructions**.** The **MANUFACTURER** shall also provide the following support personnel:

- Professional engineer or personnel under the direct supervision of a professional engineer dedicated to supporting the project through design, construction, and O&M.
- Asset Management Department dedicated to assisting operators with operational and maintenance activities.

1.07 WARRANTY

The effluent system pump **MANUFACTURER** shall provide a warranty of five (5) years to include, but not limited to the pump vault, hose and valve assembly, control panel, splice box and a separate warranty of ten (10) years for the effluent pump. Warranty term shall ensue after **OWNER'S** acceptance and system startup procedures are complete. The **MANUFACTURER** shall submit detailed exclusions from the warranty or additional cost items required to maintain the equipment in warrantable condition. The warranty shall be documented in product literature.

1.08 SERVICABILITY

The STEP package(s) shall be completely serviceable, with easy access to the pump(s), effluent screen, and floats. The pump shall be designed for removal without removing the effluent screen and floats.

1.09 PUMPS

The pump must be approved for use in pump vault as described in these specifications. Pump shall be 1/2 to 1.5 hp, 115/230 VAC, single phase, 60 Hz, two-wire motor, with 10 foot long extra heavy duty (SOOW) electrical cord with ground. The pumps must be submersible High-Head Effluent pumps. Pumps shall be UL and CSA listed for use with effluent. The pumps must have a minimum 24-hour run dry capability without water lubrication. The pumps shall have a 1/8-inch bypass orifice to ensure flow circulation for motor cooling and to prevent air bind. The pump shall have a floating impeller design to protect against up thrust and increase pump life. The pump liquid ends must be repairable (by replacing impellers and/or diffusers) for better long-term cost of ownership. The motor must be rated for continuous use and frequent cycling, at least 100 cycles per day. The motor cable must be suitable for Class 1, Division 1 and 2 applications. The pumps shall be lightweight for easy removal and maintenance. The pump intake screen must be 1/8-inch mesh polypropylene. The pump shall have internal thermal overload protection and internal lightning protection. All pumps shall undergo 3-point (Dead head, Design Flow, and Design Flow + 30%) wet testing at the factory to confirm performance.

1.10 BUILDING SEWER

Building side sewers shall be watertight and installed by a Contractor licensed to such work as per the local and state licensing requirements. Building sewer materials, installation and testing shall be per the current local plumbing code.

PART 2 TANKS

2.01 GENERAL REQUIREMENTS

A. The **MANUFACTURER** shall provide the structural design and certification to the **ENGINEER** for review. The design shall be in accordance with accepted engineering practice. Precast concrete or fiberglass or polyethylene tanks shall have been designed by a registered engineer and approved by state or local regulatory agencies or authorities. To achieve effective performance and minimize pump-out occurrences, residential interceptor tanks shall have a nominal liquid capacity of 1,250 gallons for up to 4 bedrooms, 1,500 gallons for up to 5 bedrooms, and, for more than 5 bedrooms, the sizing shall be determined based on an occupancy assessment and shall be in accord with Figure 1.

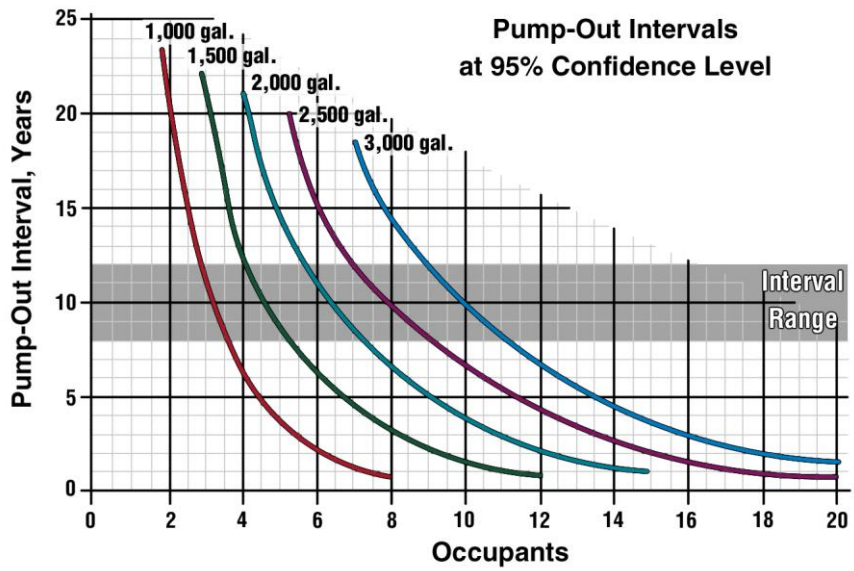

Figure 1. Interceptor Tank Pump-Out Intervals

B. Average flow (Q_a) is based upon typical weekly discharges. Wastewater flows for single-family dwellings typically range from *40 to 60 gallons per capita per day (gpcd)*; **50 gpcd** is a commonly used design parameter and is the value used in calculations herein. The number of individuals (capita) is assumed to average three per dwelling. Typical occupancies and flow relationships are shown in Table 1.

a.Table 1: Relationship between Number of Bedrooms, Occupancies, and Flow

Bedrooms	Q_p[a] *gpd/DU*	**Occupants**[b] *capita*	Q_c *gpcd*	Q_a *gpd/DU*
1	200	2	55	110
2	300	3	50	150
3	375	4	50	200
4	450	5	45	225

a. Peak day bedroom flows (Q_p) are based on typical administrative rules.

b. Occupancy is based on typical usage of two occupants for the first bedroom and one occupant per additional bedroom.

C. Loading Criteria:

a. There shall be 140 lbs./cu.ft. for minimum weight of saturated backfill, or 127 lbs./cu.ft. for unsaturated backfill (500 lbs./sq.ft. minimum).

b. Minimum lateral loading shall be 62.4 lbs./cu.ft. Lateral loading shall be determined from ground surface.

c. The tank shall also support a concentrated wheel load of 2500 lbs.

D. There are four (4) typical loading conditions that should be analyzed:

1. 4 ft. Bury + Full Exterior Hydrostatic Load
2. 4 ft. Bury + Full Exterior Hydrostatic Load + 2500 lb. Wheel Load.
3. 1 ft. Bury + 2500 lb. Wheel Load.
4. Tank Full, Interior Hydrostatic Load and Unsupported by Soil.

Load Case 4 represents the tank full of liquid at 62.4 lbs/cu.ft. This condition addresses seam and haunch stress-strain relationships that occur during watertightness testing, as well as poor soil bedding conditions that provide inadequate support.

E. Tanks requiring deep burial (>48") or subject to truck or heavy traffic loading require special consideration. (A minimum soil cover of 12" shall be used, unless specified otherwise by **MANUFACTURER**.)

F. All tanks shall be structurally sound and watertight and shall be guaranteed in writing by the tank **MANUFACTURER** for a period of two years from the date of final acceptance. **MANUFACTURER'S** signed guarantee shall accompany **BID**. The tank guarantee/warranty shall be furnished at the time of submittal. Tank warranty shall not be limited liability to replacement cost of the tanks. The interceptor tank shall be capable of withstanding long-term hydrostatic loading, in addition to the soil loading, due to a water table maintained at ground surface.

G. Tanks shall be manufactured and furnished with access openings 20" in diameter and of the configuration shown on the manufacturer's drawings. Modification of completed tanks will not be permitted.

H. Inlet plumbing shall include an inlet tee that penetrates 18" into the liquid from the inlet flow line. (The depth may vary depending on the tank's height; in all cases, though, the inlet should extend to a level below the bottom of the maximum scum depth.) The inlet plumbing shall allow for natural ventilation back through the building sewer and vent stack.

I. Tanks shall be capable of successfully withstanding an aboveground static hydraulic test and shall be individually tested.

J. All tanks shall be installed in strict accordance with the **MANUFACTURER'S** recommended installation instructions

2.02 CONCRETE TANKS

A. All concrete tanks will be pre-approved by the ENGINEER. Walls, bottom and top of reinforced concrete tanks shall be designed across the shortest dimension using one-way slab analysis. Stresses in each face of monolithically constructed tanks may be determined by analyzing the tank cross-section as a continuous fixed frame.

B. The walls and bottom slab shall be poured monolithically; alternatively, water stops may be provided. Mid-seam or clamshell tanks are not acceptable.

C. Reinforcing steel shall be ASTM A-615 Grade 60, fy = 60,000 psi. Details and placement shall be in accordance with ACI 315 and ACI 318.

D. Concrete shall be ready-mix with cement conforming to ASTM CI50, Type II. It shall have a cement content of not less than six (6) sacks per cubic yard and maximum aggregate size of 3/4". Water/cement ratio shall be kept low (0.35±), and concrete shall achieve a minimum compressive strength of 4000 psi in 28 days. The Contractor shall submit a concrete mix design to the **ENGINEER** for review and approval. Three (3) concrete sample cylinders shall be taken and tested for each tank manufactured until the **MANUFACTURER** and **ENGINEER** are satisfied that the minimum compression strength is being obtained. To ensure compliance, the **MANUFACTURER** shall then make and set three (3) sample

cylinders for a minimum of 20% of the remaining tanks at the discretion of the **ENGINEER** . If the minimum compressive strength is not being obtained, the **MANUFACTURER** shall be required to make and test sample cylinders for each tank manufactured. Calcium chloride will not be allowed in the mix design. The cost of testing cylinders shall be the tank **MANUFACTURER'S** responsibility. The tank manufacturer may supply a Swiss hammer for compressive testing in the field in lieu of sample cylinders.

E. Tanks may be protected by applying a heavy cement-base waterproof coating, on both inside and outside surfaces, in compliance with Council of American Building Officials (CABO) report #NRB-168; 6181; however, the tank should be watertight without the addition of seal coatings.

F. Form release used on tank molds shall be Nox Crete™ or approved equal. Diesel or other petroleum products are not acceptable.

G. Tanks shall not be moved from the manufacturing site to the job site until the tank has cured for seven (7) days or has reached two-thirds of the design strength.

H. Tanks shall be manufactured and furnished with access openings of the size and configuration to accommodate individual packaged pump systems. The risers can be cast into the tanks.

I. The septic tank and the top slab shall be sealed with a preformed flexible plastic gasket. The flexible plastic gasket shall be equal to the flexible butyl resin sealant congeal CS-102 or CS-202 as manufactured by Concrete Sealants, Inc. of New Carlisle, Ohio, and shall conform to federal specification SS-S-00210(2iOA) and AASHTO M-198. A mechanical fastening method shall be used if the seasonal groundwater level may reach the top slab seam of the tank.

J. In order to demonstrate watertightness, tanks shall be tested at the factory and again on-site prior to acceptance. Inlets to the septic tank will be watertight pipe seal Cast-A-Seal™ (Manufactured by Press-Seal Gasket Corporation) or approved equal. Each tank shall be tested at the factory, prior to shipping, by filling with water to the soffit and letting stand. After 24 hours, the tank shall be refilled to the soffit and the exfiltration rate shall be determined by measuring the water loss during the next two (2) hours. Any leakage shall be cause for rejection. After installation is completed and before backfilling, each tank shall be filled with water to a point 2" above the top of the tank and the water loss measured after a twenty four-hour period. After it has been determined that there is no leakage, test the access riser seam. Backfill to a minimum depth of 2" above the riser seam to prevent damage from hydrostatic uplift. Fill the tank to a point 2" above the riser seam (the field test period may be reduced to not less than two (2) hours). No tank will be accepted if there is any leakage over the two (2) hour period.

PART 3 TANK ACCESS EQUIPMENT

3.01 RISERS

Risers **MANUFACTURER** shall be Orenco Systems®, Inc. Risers shall be required for access to internal vaults and access into the septic tanks for septage pumping. All risers shall be constructed watertight. The risers shall be attached to the tanks such that a watertight seal is provided. Risers shall extend 3" above original grade to allow for settlement and to ensure positive drainage away from the access. Risers for inspection ports shall be a minimum of 18" in nominal diameter. Risers containing pumping assemblies or electrical splice boxes shall be a minimum of 24" in diameter and shall be of sufficient diameter to allow removal of internal vaults without removing splice boxes, etc. Risers shall be a minimum of 30" in nominal diameter when the depth of bury is 36" or greater or duplex pumping assemblies are used. All other risers shall be a minimum of 24" in nominal diameter and shall vary in height depending on the depth of bury on the various tanks. Adhesive required to adhere the PVC or fiberglass risers to either fiberglass or ABS tank adapters shall be a two-component methacrylate structural adhesive or

approved equal. To ensure product compatibility, a single manufacturer shall supply risers, lids, and attachment components.

3.02 INLET RISERS

Inlet risers shall be Orenco Systems®, Inc. Model Ultra-Rib, KOR FLO or **ENGINEER**-approved equal. The material shall be PVC as per ASTM D-1784 and tested in accordance with AASHTO M304M-89. The risers shall be constructed of non-corrosive material and designed-to-be buried in soil. Risers shall have a minimum stiffness of 10 psi, when tested according to ASTM D2412. Risers shall be capable of withstanding a truck wheel load (54 square inches) of 2,500 pounds for 60 minutes with a maximum vertical deflection of a 1/2 an inch. Risers shall extend to 3 inches above the ground surface to allow for settlement and shall have a minimum nominal diameter of 18 inches.

3.03 OUTLET RISERS

Outlet risers shall be Orenco Systems®, Inc. Model Ultra-Rib, KOR FLO or engineer-approved equal. The material shall be PVC as per ASTM D-1784 and tested in accordance with AASHTO M304M-89. The risers shall be constructed of non-corrosive material and designed-to-be buried in soil. Risers shall have a minimum stiffness of 10 psi, when tested according to ASTM D2412. Risers shall be capable of withstanding a truck wheel load (54 square inches) of 2,500 pounds for 60 minutes with a maximum vertical deflection of 1/2 an inch. Risers shall be at least 12 inches high, shall have a minimum nominal diameter of 24 inches for simplex pumping applications or 30 inches when used in a duplex pumping application and shall be factory-equipped with the following:

3.04 RISER-TO-TANK ATTACHMENT

If risers are not cast into the tank lids, then all attachment components shall be constructed of waterproof, non-corrosive materials, such as PVC, ABS, fiberglass, or stainless steel. Adhesives and sealants shall be waterproof, corrosion resistant and approved for the intended application. The riser-to-tank connection shall be watertight and structurally sound. The riser-to-tank connection shall be capable of withstanding a vertical uplift of 5000 pounds to prevent riser separation due to tank settlement, frost heave, or accidental vehicle traffic over the tank. Risers shall be attached to tanks with one of the following attachment systems, or approved equal:

a. Orenco Systems®, Inc. Model PRTA24-2 (24" diameter riser) tank adapter cast into tank lid and a two-component methacrylate structural adhesive for the riser connection.

b. Orenco Systems®, Inc. Model RRFTA30 (30" diameter riser) tank adapter bolted down to the tank lid using Orenco's bolt down kit, Model RRFTA30BDKIT (stainless steel concrete anchor bolts and butyl sealant tape), and a two-component methacrylate structural adhesive for the riser connection.

3.05 LIDS

One lid shall be furnished with each access riser. Lids shall be Orenco Systems®, Inc. DuraFiber Model FLD24G, or FLD30G or **ENGINEER**-approved equal, as appropriate, fiberglass with green non-skid finish, and provided with stainless steel bolts. **MANUFACTURER** shall provide evidence that lids have been used successfully in continuous field service for a minimum of five years to demonstrate long-term integrity and suitability for the application. Lids shall be waterproof, corrosion resistant and UV resistant. Lids shall be flat, with no noticeable upward dome; a crown or dome of no more than 1/8" is allowable. Lids shall not allow water to pond on them. Lids shall have a green non-skid finish. Self-lubricating plastics, such as polyethylene, shall not be considered non-skid without addition of a non-skid coating. Lids shall form a watertight seal with the top of riser. Lids shall be capable of withstanding a truck wheel load (81 square inches) of 2500 pounds for 60 minutes with a maximum vertical deflection of 3/4 of an

inch. Lids shall be provided with tamper-resistant stainless steel fasteners and a tool for fastener removal. Tamper-resistant fasteners include recessed drives, such as hex, Torx, and square. Fasteners that can be removed with common screwdrivers, such as slotted and Phillips, or fasteners that can be removed with standard tools, such as pliers or crescent wrenches, are not considered tamper-resistant. To prevent a tripping hazard, fasteners shall not extend above the surface of the lid. Optional components may include the following:

a. Traffic bearing lid: The traffic bearing lid shall be a cast iron frame and cover, part number 6024, 3060, 4036, as manufactured by Sather Manufacturing Co., Inc., or approved equal, which will fit over a standard lid. The cover shall have the word SEWER cast into it.

3.06 RISER INSTALLATION

Riser installation shall be accomplished according to the **MANUFACTURER'S** instructions. For cold weather areas, risers shall be backfilled with 3/8" pea gravel or other similar granular material to prevent frost heave.

PART 4 SEPTIC TANK EFFLUENT PUMPING ASSEMBLIES (SINGLE FAMILY RESIDENCES)

The Collection System On-Lot Package shall be certified to have been manufactured by Orenco Systems®, Inc., Sutherlin, Oregon. Orenco shall provide a unique Certificate of Origin with each Collection System On-Lot Package that lists all products in the Collection System On-Lot Package. Orenco warrants that any Products that comprise a Collection System On-Lot Package that are sold under an Orenco Certificate of Origin, will be free from defects in materials and workmanship for a period of five (5) years, with the exception of the pump which will be for a period of ten (10) years from the date of installation of the equipment, in accordance with, and subject to, the terms and conditions in effect at the time of sale.

Pump package systems shall be manufactured by Orenco Systems®, Inc. High-Head Pumping Assemblies or **ENGINEER**-approved equal, composed of:

4.01. RISERS AND LIDS

See PART 3.

4.02 PUMP VAULT

Orenco Systems®, Inc. Model PVU Series, Universal Biotube® Pump Vault or **ENGINEER**-approved equal, installed in conformance with the **ENGINEER'S** plans. The filter shall have a minimum effective screen area of no less than 14.5 square feet. The Biotube pump vault shall consist of a 12-inch diameter polyethylene vault with eight (8) 2-inch diameter holes evenly spaced around the perimeter, located appropriately to allow for maximum sludge and scum accumulation before requiring pumping (approximately 70% of minimum liquid level). Housed inside the polyethylene vault shall be the Biotube assembly consisting of 1/8-inch mesh polypropylene tubes. Attached to the vault is a flow inducer to accept one or two high-head effluent pumps.

4.03 DISCHARGE HOSE AND VALVE ASSEMBLY

For most single-family residences, Orenco Systems®, Inc. Model HV100BFCASQPRX or **ENGINEER**-approved equal. Discharge assembly shall be 1-inch diameter and include 150 psi PVC ball valve, anti-siphon valve, flow controller, high pressure flex hose with working pressure rating of 250 psi, and Schedule 40 PVC pipe with cam coupler adapter for quick disconnect.

4.04 FLOAT SWITCH ASSEMBLY

Float switch shall be mercury-free Orenco Systems®, Inc. Model MFPB with two mechanical switch floats mounted on a PVC stem attached to the filter cartridge. The floats must be adjustable and must be removable without removing the pump vault. The high level alarm and on/off function shall be preset as shown in the **ENGINEER'S** plans. Each float lead shall be secured with a nylon strain relief bushing at the splice box. The on/off float shall be rated for a minimum of 5.0A @ 120 VAC.

4.05 HIGH-HEAD EFFLUENT PUMP

All pumps shall comply with general requirements set forth in section I (above). Residential pumps shall be an Orenco Systems®, Inc. Model PF100511CV, 1/2 hp, 115 VAC, single phase, 60 Hz, two-wire motor, with 10 foot long extra heavy duty (SOOW) heavy duty electrical cord with ground. Pump shall include an internal check valve and shall be capable of delivering 18 GPM at a pressure of 14 ft, 10 GPM at 171 ft, and 0 GPM at 250 ft. When used in conjunction with a flow controller, the pump shall be capable of providing 5 gpm against a head of 190 feet.

4.06 ELECTRICAL SPLICE BOX

Orenco Systems®, Inc., Model SB series internal splice box or **ENGINEER**-approved equal, UL approved for wet locations, equipped with three (3) electrical cord grips and a 1-inch outlet fitting. Also included shall be UL listed waterproof wire nuts. The use of a UL-approved conduit seal kit accessible above ground shall be required to prevent the passage of gases, vapors, or flames through the conduit to the control panel. An additional UL classified sealant shall be added to the splice box coupling to prevent condensation accumulation in the splice box. The following UL approved sealants shall be used:

a. UL classified moisture-cure polyurethane quick drying foam or **ENGINEER**-approved equal with an R-5 rating for each inch of foam.

b. UL classified silicone sealant or **ENGINEER**-approved equal consiting of a neutral cure silicone, non-acetic, non-corrosive silicone able to withstand temperatures to 450° F.

4.07 CONTROLS AND ALARMS

Controls and alarms shall be listed per UL 508. Panels shall be repairable in the field without the use of soldering irons or substantial disassembly. For most single family home applications, an Orenco Systems®, Inc. Model S1 Series or **ENGINEER**-approved equal control panel meeting the following:

Standard Components

a. Motor-Start Contactor: 120 VAC, 1hp, 16 FLA, 60 Hz; 2.5 million cycles at FLA (10 million at 50% of FLA).

b. Toggle Switch: Single-pole, double-throw HOA switch. 20 amps, 1 hp.

c. Controls Circuit Breaker: 10 amps, OFF/ON switch. Single-pole 120 VAC. DIN rail mounting with thermal magnetic tripping characteristics.

d. Pump Circuit Breaker: 20 amps, OFF/ON switch. Single-pole 120 VAC. DIN rail mounting with thermal magnetic tripping characteristics.

e. Audio Alarm: 95 dB at 24", warble-tone sound.

f. Visual Alarm: 7/8" diameter red lens, "Push-to-silence." NEMA 4, 1-watt bulb, 120 VAC

g. Panel Enclosure: Measures 11.5" high x 9.3" wide x 5.4" deep. NEMA 4X rated. Constructed of UV-resistant fiberglass; hinges and latch are stainless steel.

h. S1 Panel Ratings: 120 VAC, 1 hp, 14 amps, single phase, 60 Hz.

4.08 INSTALLATION

All pumping system components shall be installed in accordance with the **MANUFACTURER'S** recommendations, the **ENGINEER'S** plans, and all state and local regulations.

4.09 LOCATION

The pump control panel shall be mounted on a post or exterior wall nearest the tank and pump. If mounting to an exterior wall, try to select a garage or outbuilding where the sound of the motor contactor engaging will not be noticed. If a garage or outbuilding wall isn't available, installation should include use of sound-deadening insulation. (Post and panel mounting assemblies are acceptable.) The control panel shall be located within 50 feet and in sight of the pump motor or shall be provided with a lockable disconnect switch. The panel, when possible, should be mounted in the shade and protected from the weather. The panel should be located at a convenient height (usually about five feet above the ground) and where it will be accessible for maintenance.

PART 5 SEPTIC TANK EFFLUENT PUMPING ASSEMBLIES (COMMERCIAL CONNECTIONS)

The Collection System On-Lot Package shall be certified to have been manufactured by Orenco Systems®, Inc., Sutherlin, Oregon. Orenco shall provide a unique Certificate of Origin with each Collection System On-Lot Package that lists all products in the Collection System On-Lot Package. Orenco warrants that any Products that comprise a Collection System On-Lot Package that are sold under an Orenco Certificate of Origin, will be free from defects in materials and workmanship for a period of five (5) years from the date of installation of the equipment, in accordance with, and subject to, the terms and conditions in effect at the time of sale.

Systems shall be Orenco Systems®, Inc. High-Head Pumping Assemblies or **ENGINEER**-approved equal, composed of:

5.01 TANK

See PART 2 above. Tank volumes and configurations serving commercial connections shall follow the most current edition of Orenco's AdvanTex Design Criteria, NDA-ATX-1, Table A. Recommended Minimum HRTs, Primary Tankage and Configurations.

5.02 RISERS AND LIDS

See PART 3 above.

5.03 PUMP VAULT

Orenco Systems®, Inc. Model PVU Series, Universal Biotube® Pump Vault or **ENGINEER**-approved equal, installed in conformance with the **ENGINEER'S** plans. The filter shall have a minimum effective screen area of no less than 14.5 square feet. The Biotube pump vault shall consist of a 12-inch diameter polyethylene vault with eight (8) 2-inch diameter holes evenly spaced around the perimeter, located appropriately to allow for maximum sludge and scum accumulation before requiring pumping (approximately 70% of minimum liquid level). Housed inside the polyethylene vault shall be the Biotube assembly consisting of 1/8-inch mesh polypropylene tubes. Attached to the vault is a flow inducer to accept one or two high-head effluent pumps. (Note: Commercial and multiple-user tanks may require a larger or multiple Biotube Pump Vaults, the sizes of which must be individually determined and spelled out in the specifications.)

5.04 DISCHARGE HOSE AND VALVE ASSEMBLIES

Orenco Systems®, Inc. Model HV125BCASQPRX or **ENGINEER**-approved equal, 1-1/4-inch diameter, 150 psi PVC ball valve, 150 psi PVC check valve, high pressure flex hose with working pressure rating of 250 psi, and Schedule 40 PVC pipe with cam coupler adapter for quick disconnect.

5.05 FLOAT SWITCH ASSEMBLY

Float switch shall be mercury free Orenco Systems®, Inc. Model MF3P with three switch floats mounted on a PVC stem attached to the filter cartridge. The floats must be adjustable and must be removable without removing the pump vault. The high/lag, pump on, pumps off and low-level alarms shall be preset as shown in the **ENGINEER'S** plans. Each float lead shall be secured with a nylon strain relief bushing at the splice box. The floats shall be UL or CSA listed.

5.05 COMMERCIAL HIGH-HEAD EFFLUENT PUMPS

All pumps shall comply with general requirements set forth in PART 1.10 (above). All commercial applications shall use Duplex (2) pumping systems for redundancy. Pumps shall be Orenco Systems®, Inc. Model PF Series High Head pump, 1.0 Hp, 230 VAC, single phase, 60 Hz, two-wire motor, with 10 foot long extra heavy duty (SOOW) heavy duty electrical cord with ground. The pumps shall be capable of delivering 20 GPM at a pressure of 150 ft, 0 GPM at 255 ft, and 30 GPM at 39 ft.

Pump models and capabilities will vary based upon application and will vay by site.

5.06 ELECTRICAL SPLICE BOXES

Orenco Systems®, Inc. Model SBEX series external splice boxes or **ENGINEER**-approved equal, UL approved for wet locations, equipped with up to four (4) electrical cord grips and two 3/4-inch outlet fittings. Also included shall be UL listed waterproof butt splice connectors. The use of a UL-approved conduit seal kit accessible above ground shall be required to prevent the passage of gases, vapors, or flames through the conduit to the control panel. An additional UL classified sealant shall be added to the splice box coupling to prevent condensation accumalation in the splice box. The following UL approved sealants shall be used:

a. UL classified moisture-cure polyurethane quick drying foam or **ENGINEER**-approved equal with an R-5 rating for each inch of foam.

b. UL classified silicone sealant or **ENGINEER**-approved equal consisting of a neutral cure silicone, non-acetic, non-corrosive silicone able to withstand temperatures to 450° F.

5.07 CONTROLS AND ALARMS

Control panel shall be Orenco Systems®, Inc. MVP DAX Series. Control panel shall be a duplex control panel. Controls and alarms shall be listed per UL 508. Panels shall be repairable in the field without the use of soldering irons or substantial disassembly. Panel shall be Orenco Systems, Inc. Model MVP Series control panel meeting the following:

Standard Components

a. Programmable Logic Unit: 120/240 VAC programmable logic unit with built-in LCD screen and programming keys. Provides control functions and timing for panel operation**.**

b. Motor-Start Contactor: 120 VAC 16 FLA, 1 hp, 60 Hz; 2.5 million cycles at FLA (10 million at 50% FLA). 240 VAC 16 FLA, 3 hp, 60 Hz; 2.5 million cycles at FLA (10 million at 50% FLA).

c. Toggle Switch: Single-pole, double-throw HOA switch. 20 amps, 1 hp.

d. Controls Circuit Breaker: 10 amps, OFF/ON switch. Single-pole 120 VAC. DIN rail mounting with thermal magnetic tripping characteristics.

e. Pump Circuit Breaker: 20 amps, OFF/ON switch. Single-pole 120 VAC, double-pole 240 VAC. DIN rail mounting with thermal magnetic tripping characteristics.

f. Audio Alarm: 95 dB at 24", warble-tone sound.

g. Visual Alarm: 7/8" diameter red lens, "Push-to-silence." NEMA 4, 1-watt bulb, 120 VAC

h. Panel Enclosure: NEMA 4X rated, constructed of UV-resistant fiberglass or NEMA 4 rated, constructed of steel; hinges and latch are stainless steel. Conduit couplings provided.

i. MVP: Panel Ratings: 120 VAC, 1 hp, 16 amps, single phase, 60 Hz.; 240 VAC, 3 hp, 16amps, single phase, 60 Hz.

5.07 INSTALLATION

All pumping system components shall be installed in accordance with the **MANUFACTURER'S** recommendations, the **ENGINEER'S** plans, and all state and local regulations.

5.08 LOCATION

The **CONTRACTOR** shall locate the pump control panel on a post or exterior wall nearest the tank and pump. If mounting to an exterior wall, try to select a garage or outbuilding where the sound of the motor contactor engaging will not be noticed. If a garage or outbuilding wall isn't available, installation should include use of sound-deadening insulation. (Post and panel mounting assemblies are acceptable.) The control panel shall be located within 50 feet and in sight of the pump motor or shall be provided with a lockable disconnect switch. The panel, when possible, should be mounted in the shade and protected from the weather. The panel should be located at a convenient height (usually about five feet above the ground) and where it will be accessible for maintenance.

5.09 SERVICE CONNECTION

Orenco Systems®, Inc. Model SC100 (1"), SC125 (1.25"), SC150 (1.5"), or SC200 (2") or **ENGINEER**-approved equal. Service connection will include a swing check valve factory connected to a ball valve. All components will be PVC Schedule 40 and rated for 150psi.

a. Service connection shall be enclosed in PVC access riser as manufactured by Orenco Systems®, Inc. or **ENGINEER**-approved equal. Risers shall extend to two inches above the ground surface to allow for settlement and shall have a minimum nominal diameter of 8-inches.

b. One lid shall be furnished with each access riser. Lids shall be Orenco Systems®, Inc. Model FL8G or **ENGINEER**-approved equal, fiberglass with green non-skid finish.

5.10 SERVICE LINE TESTING

An air compressor may be used to bring the line to its test pressure; the test is a success if the pressure holds for 60 seconds or more. Any leakage will require the line to be repaired and retested.. When the service line can be filled with water from the tank test, particularly if the service line is short and doesn't require a large volume to fill it, a small hand pump with pressure guage can be employed for the pressure test.

PART 6 TOOLS FOR SEPTAGE MEASUREMENT

6.01 SCUM MEASURING UTILITY GUAGE (SMUG)

CONTRACTOR shall provide a minimum of one scum measuring utility gauge. The gauge shall consist of a minimum 3/8" diameter stainless steel rod with an incremental scale for measuring scum levels. The rod shall be bent at a 90-degree angle at the base to aid in identifying the scum "by feeling." The gauge shall be Orenco Systems®, Inc. Model SMUG or **ENGINEER**-

approved equal.

6.02 SLUDGE MEASURING DEVICE

CONTRACTOR shall provide a minimum of one **ENGINEER**-approved sludge-measuring device.

PART 7 FORCEMAIN COMPONENTS & TESTING

7.01 COMBINATION AUTOMATIC AIR/VACUUM RELEASE VALVE

A.R.I Model D-021 or **ENGINEER**-approved equal. Valve base shall be made of reinforced nylon and include a Buna N rubber base O-ring seal. Body shall be constructed of reinforced nylon housing a foamed polypropylene float and stainless steel stem. Valve will also include a polypropylene elbow to expel air horizontally. Valve shall be corrosion resistant and operable with a minimum line pressure of 3 psig.

a. Piping shall be Orenco Systems®, Inc. Model ARA or **ENGINEER**-approved equal. Piping shall be constructed of Schedule 40 PVC and include a 2-inch diameter PVC isolation valve, a 3/4-inch diameter PVC ball valve for bypass, and a pressure guage connection. All components shall be rated for 150psi working pressure.

b. Air release assembly shall be enclosed in ribbed PVC access riser as manufactured by Orenco Systems®, Inc. or **ENGINEER**-approved equal. The material shall be PVC as per ASTM D-1784 and tested in accordance with AASHTO M304M-89. Risers shall extend to two inches above the ground surface to allow for settlement and shall have a minimum nominal diameter of 30.

c. Orenco Systems®, Inc. Model FLD30G or **ENGINEER**-approved equal, fiberglass with green non-skid finish, and provided with stainless steel bolts, and wrench. The riser and lid combination shall be sealed for watertightness and able to support a 2500 lb. wheel load. (Note: This is not to imply that PVC risers are intended for traffic areas.)

7.02 MANUAL VALVES

Orenco Systems®, Inc. Model ARA or **ENGINEER**-approved equal as listed above. Valves will include the following piping:

a. Piping shall be constructed of Schedule 40 PVC and include a 2-inch diameter PVC isolation valve, a 3/4-inch diameter PVC ball valve for bypass, and a pressure guage connection. All components shall be rated for 150 psi working pressure and allow the installation of a combination air/vacuum release valve.

b. Air release assembly shall be enclosed in ribbed PVC access riser as manufactured by Orenco Systems®, Inc. or **ENGINEER**-approved equal. The material shall be PVC as per ASTM D-1784 and tested in accordance with AASHTO M304M-89. Risers shall extend to two inches above the ground surface to allow for settlement and shall have a minimum nominal diameter of 30.

c. Orenco Systems®, Inc. Model FL30G or **ENGINEER**-approved equal, fiberglass with green non-skid finish, and provided with stainless steel bolts, and wrench. The riser and lid combination shall be sealed for watertightness and able to support a 2500 lb. wheel load. (Note: This is not to imply that PVC risers are intended for traffic areas.)

7.03 FORCEMAIN TESTING

A. The **CONTRACTOR** shall adhere rigorously to all hydrostatic testing procedures and requirements. Allowable AWWA leakages should be the maximum, not to be exceeded. Zero

leakage should be the goal.

Hydrostatic Test Procedure

1. Fill the line with water to expel air.
2. Pressurize to the desired pressure at the lowest point.
3. Hold for two hours to ± 5 PSI of test pressure.
4. Accurately record time, pressure readings, and amount of leakage.
5. For further details, refer to AWWA C 600 Section 4.

Allowable Loss Gal/Hr/1000 ft. of Line

Test Pressure	3 in.	4 in.	6 in.	8 in.	10 in.	12 in.
150 psi	0.28	0.37	0.55	0.74	0.92	1.10
125 psi	0.25	0.34	0.50	0.67	0.84	1.01
100 psi	0.23	0.30	0.45	0.60	0.75	0.90

$$L = \frac{S\,D\,\sqrt{(P)}}{133200}$$

Where:

L = Allowable leakage for push-on or mechanical joints, GPH. *

S = Length of pipe tested, feet.

D = Nominal pipe diameter, inches.

P = Average test pressure, PSI, at lowest location on test section.

*Add 0078 gal/hr/in of nominal valve size for each metal-seated gate valve pumped against.

B. Portions of the line that are critical or suspect should be left exposed throughout the hydrostatic test to allow visual inspection. Leaks detected visually should be repaired regardless of test results. The use of dye during initial filling and testing of a mainline section makes isolating leaks much easier especially in areas having high ground water.

C. Check valve failure in service lines is difficult to diagnose and may misrepresent mainline integrity. Therefore, service line connections should remain closed until mainline testing has been completed. Accurate records must be kept to assure all service line connections have been opened after the mainline system has been approved.

D. Testing long segments of line should be avoided whenever possible. A lengthy segment of line may pass the leakage test, yet still have an isolated leak that is excessive and which could prove to be a problem later. Testing shorter segments of line reduces this possibility and more readily isolates any leaks. The most common recommendation is to limit the test length to 12,000/D, where D is the diameter in inches and the length of the segment is in feet.

E Because air escapes from pipelines more rapidly than does liquid, it is important that all air is purged from a section of line prior to hydrostatic testing. Failure to do so may give

misleading test results, possibly causing the section of line to appear to fail the test.

PART 8 SUPPORT, TRAINING, TESTING, AND OVERSIGHT

8.01 PRECONSTRUCTION CONFERENCE

Before any work at the site is started, a conference attended by the **OWNER**, **CONTRACTOR**, **ENGINEER,** and **MANUFACTURERS (or their** agents) and others as appropriate will be held to establish a working understanding among the parties as to the work involved for installing each STEP unit. At this conference, the **OWNER**, **CONTRACTOR**, **ENGINEER**, and **MANUFACTURER** shall designate, in writing, a specific individual to act as **INSPECTOR** for the installation of each STEP unit. Any cost or fees associated with the services of the **INSPECTOR** or the **ENGINEER** during construction will be the responsibility of the **OWNER.**

8.02 INSTALLATION AND FIELD TESTING TRAINING

A. The **MANUFACTURER** shall provide the services of a trained representative to instruct the installing **CONTRACTOR'S** crew and **INSPECTOR** regarding the proper installation and field testing of each STEP unit per the **MANUFACTURER'S** recommendations and requirements. The **MANUFACTURER** shall have a trained representative provide installation and field testing training services for a minimum of one (1) visit of a minimum of one (1) eight-hour day at the beginning of construction, unless the contracotr is already familiar with installing Manufacturer's STEP systems.

B. As part of the **MANUFACTURER's** installation training and to help ensure that subsequent installations are installed in accordance with **MANUFACTURER's** installation instructions, the **MANUFACTURER** or an approved representative, shall inspect and submit an inspection checklist report for the first (complete) installation. Subsequent installations shall not commence until the first install is inspected by the **MANUFACTURER**, **INSPECTOR**, and accepted by the **ENGINEER**.

8.03 QUALITY CONTROL

A. To ensure quality control, the **INSPECTOR** shall inspect and certify that an initial installation of each STEP unit is in compliance with the **MANUFACTURER'S** recommendations and requirements, using the "Orenco Sewer Inspection Checklist" online form that can be found here: http://forms.orenco.com/cn/a3spb/orencosewerinspectio

B. Upon completion of the inspection, the **INSPECTOR**, in coordination with the **ENGINEER**, shall perform or direct the **CONTRACTOR** to perform any required adjustments to the equipment and place into operation under the supervision of the **ENGINEER**. All equipment and materials required to perform the testing shall be the responsibility of the **CONTRACTOR.** The completed inspection checklist shall be signed by the **INSPECTOR** and copies emailed to the **ENGINEER** and **MANUFACTURER** within one (1) week of each corresponding STEP unit being installed and prior to System Commissioning.

8.04 SYSTEM COMMISSIONING

A. The **MANUFACTURER** shall provide the services of a trained representative for training the **OWNER'S** service provider, and, when directed, randomly inspecting STEP installation's throughout the project. The inspection will include items covered in "Orenco Sewer Inspection Checklist" as well as the effluent package, wiring, and control panel placement. Upon system commissioning, the **MANUFACTURER'S** trained representative shall provide the **ENGINEER** a written report of findings. The **ENGINEER** should then perform or direct the **CONTRACTOR** to perform any required adjustments to the equipment

and place into operation. All equipment and materials required to perform additional testing shall be the responsibility of the **CONTRACTOR.**

B. The **MANUFACTURER** shall provide the services of a trained representative for a minimum of one (1) visit of a minimum of one (1) eight-hour day for the purpose of system commissioning.

PART 9 OPERATION AND MAINTENANCE

9.01 OPERATION AND MAINTENANCE MANUAL

The **MANUFACTURER** shall provide five (5) operation and maintenance manuals to be sent to the **OWNER.**

9.02 RECOMMENDED SPARE PARTS

One spare pump, six (6) spare floats, check valve, anti-siphon valve, controls, and various other necessary components for every 50 pump systems (to be purchased by the OWNER).

9.03 RECOMMENDED OPERATION AND MAINTENANCE TOOLS

A. BIOTUBE CARTRIDGE CLEANING CRADLE

Cradle shall be Orenco Systems®, Inc. Model OM-BIOTUBE CRADEL or **ENGNEER**-approved equal for housing the Biotube Biotube pump vault filter cartridges for cleaning and maintenance.

B. BIOTUBE CARTRIDGE CLEANING BRUSH

Brush shall be Orenco Systems®, Inc. Model OM-BIOTUBE BRUSH or **ENGINEER**-approved equal for cleaning Biotube pump vault filter cartridges.

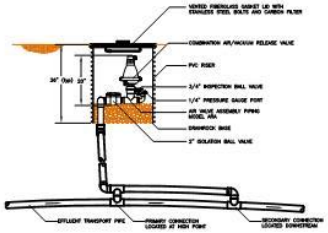

COMBINATION AIR/ VACUUM RELEASE DETAIL
SCALE: NTS

NOTE:
1. PROTECT THE MAIN LINE FROM BEING DAMAGED BECAUSE OF DRAINING LINES ON THE RISER BY MAKING THE RISER IS PLACED ON A DOUBLE BASE AND THAT THE WATER IS OUT WITH ENOUGH TO ALLOW ADEQUATE CLEARANCE BETWEEN THE BOTTOM OF THE WATER AND THE TOP OF THE PVC LINE.

CONTACT MARK SCHOLTZ (713) 468-2100 FOR ADDITIONAL INFORMATION.

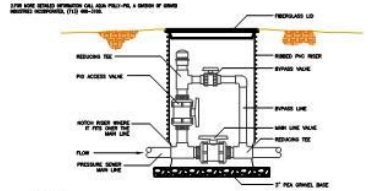

BYPASS LINE	
MAINLINE SIZE	BYPASS LINE SIZE
4"	2"
6"	3"

[illegible] – TYPICAL "TRENCH" [illegible]
SCALE: NTS

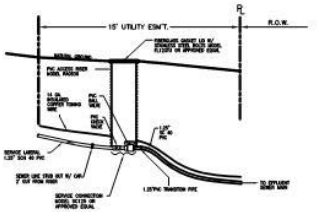

NOTES:
ALL SERVICE LINE CONNECTIONS SHALL BE SOLVENT WELDED. IF HDPE SDR9 IS USED IN PLACE OF PVC, THE ONLY ACCEPTABLE SOLVENTS AND CEMENTS ARE THOSE THAT ARE RECOMMENDED BY THE PIPE MANUFACTURER. ALL SERVICE LATERALS FROM THE EFFLUENT SEWER MAIN TO THE PROPERTY LINE SHALL BE PRESSURE TESTED PRIOR TO ANY BACKFILLING.

SEE TYPICAL SUBDIVISION UTILITY ASSIGNMENT FOR THE LOCATION OF OTHER UTILITIES (SHEET 15).

SERVICE CONNECTION W/ LATERAL DETAIL – LEFT
SCALE: NTS

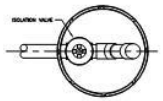

TOP VIEW

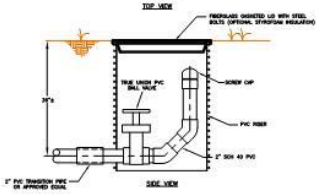

SIDE VIEW

EFFLUENT CLEAN-OUT ISOLATION VALVE DETAIL
SCALE: NTS

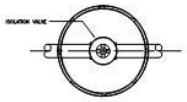

TOP VIEW

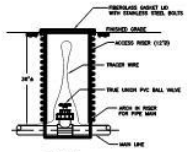

SIDE VIEW

ISOLATION VALVE DETAIL
SCALE: NTS

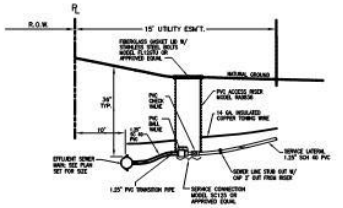

NOTES:
ALL SERVICE LINE CONNECTIONS SHALL BE SOLVENT WELDED. IF HDPE SDR9 IS USED IN PLACE OF PVC, THE ONLY ACCEPTABLE SOLVENTS AND CEMENTS ARE THOSE THAT ARE RECOMMENDED BY THE PIPE MANUFACTURER. ALL SERVICE LATERALS FROM THE EFFLUENT SEWER MAIN TO THE PROPERTY LINE SHALL BE PRESSURE TESTED PRIOR TO ANY BACKFILLING.

SEE TYPICAL SUBDIVISION UTILITY ASSIGNMENT FOR THE LOCATION OF OTHER UTILITIES (SHEET 15).

ELEVATION VIEW

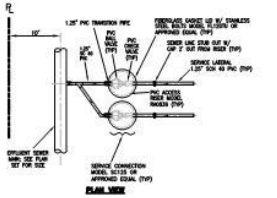

PLAN VIEW

DUAL SERVICE CONNECTION W/ LATERAL DETAIL
SCALE: NTS

M&S ENGINEERING
CIVIL ENGINEERS • LAND SURVEYORS • STRUCTURAL ENGINEERS • ENVIRONMENTAL

CONTACT
MARK SCHOLTZ
PHONE: (713) 468-2100
FAX: (713) 468-2100

MAIN OFFICE
[illegible]
[illegible]
PHONE: [illegible]

BRANCH OFFICE
[illegible]
[illegible]
PHONE: [illegible]

DATE
DATE
DRAWN: PRG
DESIGN: DRG
PEER: OTHER
REVISIONS
DELTA DESCRIPTION

SHEET:

Comal Concrete Products, Inc.

4222 FM 482 NEW BRAUNFELS, TX 78132

EMAIL:comalconcrete@comalconcrete.com

830-608-1699 SA Metro: 830-606-4732 Fax: 830-608-1396

1500 GALLON

SEPTIC TANK

NOTE: DRAWING NOT TO SCALE

PLAN VIEW TOP

2 - 20" ACCESS PORTS

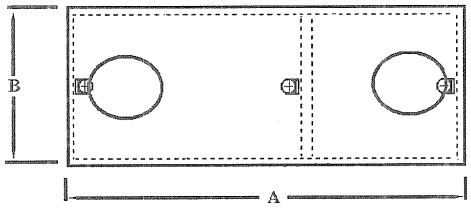

GALLON CAP	DIM. A	DIM. B	DIM. C
1500	148	80	50

SECTION:ELEVATION

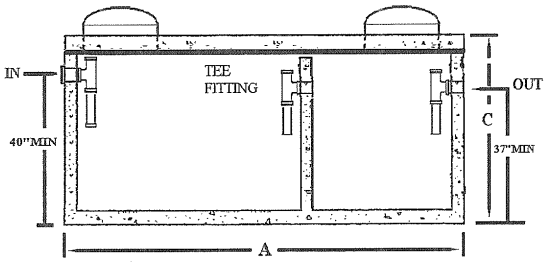

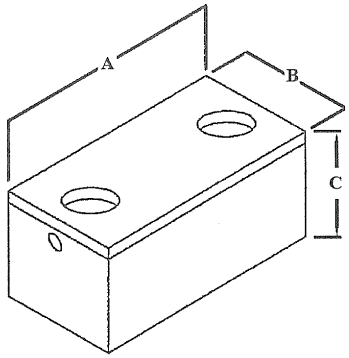

SEPTIC TANK

DESIGN CONFORMS TO: ASTM C 1227

CONCRETE:

4500 PSI CONFORMING TO ASTM C 150

STEEL REINFORCEMENT:

GRADE 60 CONFORMING TO ASTM A 615

BEDDING SPECIFICATION:

6" TO 8" DEPTH OF PEA GRAVEL BED

RECOMMENDED BY MANUFACTURER

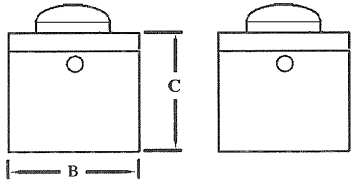

Comal Concrete Products, Inc.

4222 FM 482 NEW BRAUNFELS, TX 78132
EMAIL:comalconcrete@comalconcrete.com
830-608-1699 SA Metro: 830-606-4732 Fax: 830-608-1396

500 GALLON TO 2000 GALLON
SEPTIC TANKS

NON TRAFFIC

PLAN VIEW TOP

2 - 20" ACCESS PORTS

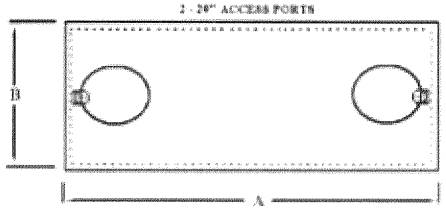

NOTE: DRAWING NOT TO SCALE

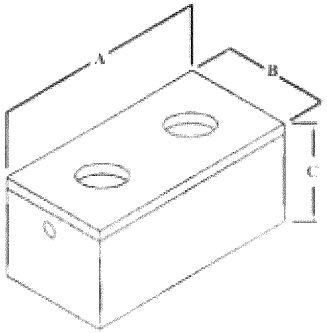

SECTION ELEVATION

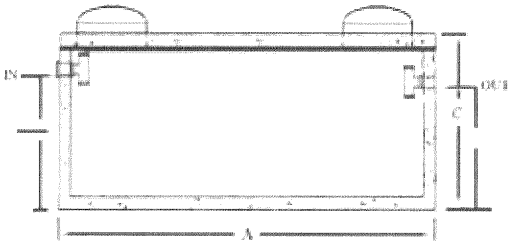

SEPTIC TANK

DESIGN CONFORMS TO: ASTM C 1227

CONCRETE:

4500 PSI CONFORMING TO ASTM C 150

STEEL REINFORCEMENT:

GRADE 60 CONFORMING TO ASTM A 615

BEDDING SPECIFICATION:

6" TO 8" DEPTH OF PEA GRAVEL BED

RECOMMENDED BY MANUFACTURER

GALLON CAP	DIM. A	DIM. B	DIM. C	FLOW -IN	FLOW -OUT	COMPARTMENTS
500	68	68	54	45	42	SINGLE
750	100	65	52	43	40	SINGLE
1000	103	79	52	43	40	SINGLE
1250	129	80	52	43	40	SINGLE
1500	151	83	50	40	37	SINGLE
2000	176	74	60	50	47	SINGLE

REVISED 8/2010 K.B.
APPROVED _____

AdvanTex®

AX-MAX General Specifications

AX-MAX EQUIPMENT SPECIFICATIONS

PART 1 - GENERAL

1.01 DEFINITIONS

A. Wherever used in these specifications and printed with initial bold capital letters, the terms listed below will have the meanings indicated which are applicable to both the singular and plural thereof.

8. *Bid* – The offer or proposal of a Bidder submitted on the prescribed form setting forth the prices for the work to be performed.

9. *Bidder* – The individual or entity who submits a Bid directly to the Owner.

10. *Contractor* – The individual or entity with whom Owner has entered into the agreement.

11. *Engineer* – The individual or entity named as such in the agreement.

12. *Inspector* - The specific individual designated by the Owner, Engineer, Contractor, and Manufacture to ensure quality control by inspecting and certifying that the installation of the AX-MAX treatment system is in compliance with the Manufactures recommendations and requirements.

13. *Manufacture* – A supplier, fabricator, distributor, material man, or vendor having a direct contract with Contractor or Owner to furnish materials or equipment to be incorporated in the work by contractor.

14. *Owner* – The individual or entity with whom Contractor has entered into the agreement and for whom the work is to be performed.

15. *Operator* – The individual or entity with whom the owner has entered into an agreement and for whom operation and maintenance shall be performed.

1.02 GENERAL DESCRIPTION

The **MANUFACTURER** shall furnish a complete advanced treatment package(s), consisting of a pump, discharge assembly, ball valve, check valve, splice box, treatment system, and controls.

1.03 SUBMITTALS

The **MANUFACTURER** shall furnish six (6) sets of shop drawings and technical data sheets. The submittals shall clearly specify the materials of construction, equipment compatibility, along with drawings for each unique package being supplied.

1.04 OR-EQUAL EVALUATIONS

A. Throughout the equipment specifications you will find the term "or approved equal." For this project, this term "approved equal" shall mean equal in the judgment of the **ENGINEER**. Should the **CONTRACTOR** seek approval of a product other than the brand or brands named in the specifications, it shall furnish written evidence that such product conforms in all respects to the specified requirements, and that it has been used successfully elsewhere under similar conditions. It will not be the responsibility of the **MANUFACTURER** specified within these specifications to provide research, documentation, or data supporting the difference between the "or equal" and the specified product. This will be the sole responsibility of the **CONTRACTOR** seeking the approval.

B. Where the specified requirements involve conformance to recognized codes or standards, the **BIDDER** shall furnish evidence of such conformance in the form of test or inspection reports, prepared by a recognized agency, and bearing an authorized signature. Manufacturer's standard data and catalog cut sheets will not be considered sufficient in themselves, and the engineer will not be responsible for seeking further data from the manufacturer, or for otherwise researching the product. Failure to provide complete data will be cause for rejection of the product. The submission shall include any impacts that could be

expected from the alternative product and shall also indicate any product that would require a license or royalty, the actual fees, and a note that these fees would be handled by the **BIDDER**. The **BIDDER** shall provide submissions; meeting the above parameters no less than TWO WEEKS prior to **BID** opening for review by the **ENGINEER** for **CONTRACTORS** seeking approval of "or equal" products or systems shall provide, at minimum, the following.

C. Product/System submittals, including, but not limited to;

1. The number of years the **MANUFACTURER** has been in business of manufacturing relevant products/systems

    a. Size of company, including

        1) Number of employees related to relevant products/systems

        2) Number of engineers on staff related to relevant products/systems

    b. Product specifications and a detailed description of how each product or component is "equal" to the specified product, system, or component. A side-by-side comparison is required.

        1) Equipment/system warranty along with exclusions

        2) Performance claims, including, but not limited to;

            a) Treatment design

                - Surface area
                - Maintenance frequency

            b) Pump motor description

                - Manufacturer and origin
                - Length of service
                - Number of units in operation
                - Life-cycle cost (repair and replacement frequency)
                - Warranty

            c) Pump liquid end description

                - Manufacturer and origin
                - Length of service
                - Number of units in operation
                - Life-cycle cost (repair and replacement frequency and cost). Note liquid ends must be remove-able and repairable and cleanable.
                - Warranty

            d) Corrosion resistance

            e) Pump Lead description

                - Lead must be SOOW, extra heavy duty cord (600V) CSA approved.

            f) Control panel components

- Manufacturer and origin
- Length of service
- Number of units in operation
- Warranty
- Enclosure description

c. Evidence of successfully obtaining approval for a system with similar permit requirements with the regulating authority

d. Summary of product/system track record and history, including, but not limited to;

1) Number of similarly sized systems

2) Detailed summary of, at minimum, ten (10) similarly sized systems, at least five (5) years old, including, but not limited to;

a) Project name, location, and application

b) Years in operation

c) Current average daily flows and design flows

d) Operator name and contact information

2. **BIDDER** shall specify and furnish documentation related to manufacturer (or representative) support services, including, but not limited to;

a. Installation training program and support material

b. Installation oversight program and support material

c. Operator training program and support material

d. Startup services program and support material

1.05 EXPERIENCE CLAUSE

The equipment furnished shall be manufactured and supplied by a company experienced in the design and manufacture of advanced treatment systems. **MANUFACTURERS** shall have a minimum ten (10) years experience in the design and manufacturer of advanced treatment systems of similar size and equipment specified. **MANUFACTURERS** shall have at minimum of twenty-five (25) successful installations of advanced treatment systems.

1.06 MANUFACTURER

The **MANUFACTURER** shall be Orenco Systems®, Inc. or approved equal. The **MANUFACTURER** shall furnish a complete factory built advanced treatment system. The **MANUFACTURER** shall supply detailed installation and O&M instructions. and evidence of an adequate service provider network shall be submitted to the **ENGINEER.** The **MANUFACTURER** shall also submit evidence that the local supplier has spare parts, equipment repair ability, and experienced service personnel. The **MANUFACTURER** shall also provide the following support personnel:

- Professional engineer or personnel under the direct supervision of a professional engineer dedicated to supporting the project through design, construction, and O&M.
- Asset Management Department dedicated to assisting operators with operational and maintenance activities.

1.07 WARRANTY

The advanced treatment system **MANUFACTURER** shall provide a three (3) year warranty for the entire treatment system, including, but not limited to the pump, pump vault, hose and valve assembly, control panel, and splice box. Warranty term shall ensue after **OWNER'S** acceptance and system startup procedures are complete. The **MANUFACTURER** shall submit detailed exclusions from the warranty or additional cost items required to maintain the equipment in warrantable condition. The warranty shall be documented in product literature.

1.08 SERVICABILITY

The advanced treatment system components shall be completely serviceable, with easy access to the pump(s), treatment system, and floats. The pump shall be designed for removal without removing the floats.

1.09 PUMPS

The pump must be approved for use in the treatment unit as described in these specifications. Pump shall be 3/4 to 2.0 hp, 230 VAC, single phase, 60 Hz, two-wire motor, with 30 foot long extra heavy duty (SOOW) electrical cord with ground. The pumps must be submersible High-Head Effluent pumps. Pumps shall be UL and CSA listed for use with effluent. The pumps must have a minimum 24-hour run dry capability without water lubrication. The pumps shall have a 1/8-inch bypass orifice to ensure flow circulation for motor cooling and to prevent air bind. The pump shall have a floating impeller design to protect against up thrust and increase pump life. The pumps liquid ends must be repairable (by replacing impellers and/or diffusers) for better long-term cost of ownership. The motor must be rated for continuous use and frequent cycling, at least 100 cycles per day. The motor cable must be suitable for Class 1, Division 1 and 2 applications. The pumps shall be lightweight for easy removal and maintenance. The pump intake screen must be 1/8-inch mesh polypropylene. The pump shall have internal thermal overload protection and internal lightning protection. All pumps shall undergo 3-point (Dead head, Design Flow, and Design Flow + 30%) wet testing at the factory to confirm performance.

If three phase power is available, then the pumps shall be 3/4 to 2.0 hp, 230 VAC, three phase, 60 Hz, with 30 foot long extra heavy duty (SOOW) electrical cord with ground. Pumps shall be in accordance with the specifications listed above.

PART 2 - PRODUCTS

2.01 PUMPS / OPERATING CONDITIONS

Pump model will vary based upon treatment system configuration and the power available to the site.

PF300512 – Pre-Anoxic Return (Rnox) Pump

Pump shall comply with general requirements set forth in section I (above). Orenco Systems®, Inc., Model PF300512 series or engineer-approved equal 1/2Hp, 230 VAC, single phase, 60 Hz, two-wire motor, with 10 - 30 foot long extra heavy duty (SO) electrical cord with ground. Pump shall be UL and CSA listed as an effluent pump.

PF500712 – Optional Flow Equalization Pumps or Discharge Pumps

All pumps shall comply with general requirements set forth in section I (above). Orenco Systems®, Inc., Model PF5007 series or engineer-approved equal 3/4Hp, 230 VAC, single phase, 60 Hz, two-wire motor, with 10 - 30 foot long extra heavy duty (SO) electrical cord with ground. Pump shall be UL and CSA listed as an effluent pump.

PF501012 – Optional Flow Equalization Pumps or Discharge Pumps

All pumps shall comply with general requirements set forth in section I (above). Orenco Systems®, Inc., Model PF5010 series or engineer-approved equal 1Hp, 230 VAC, single phase, 60 Hz, two-wire motor, with 10 - 30 foot long extra heavy duty (SO) electrical cord with ground. Pump shall be UL and CSA listed as an effluent pump.

PF751012 – Duplex Recirculation Pumps

All pumps shall comply with general requirements set forth in section I (above). Orenco Systems®, Inc., Model PF7510 series or engineer-approved equal 1Hp, 230 VAC, single phase, 60 Hz, two-wire motor, with 10- 30 foot long extra heavy duty (SO) electrical cord with ground. Pump shall be UL and CSA listed as an effluent pump.

Or

PF1452012 – Simplex Recirculation Pumps

All pumps shall comply with general requirements set forth in section I (above). Orenco Systems®, Inc., Model PF1452012 series or engineer-approved equal 2Hp, 230 VAC, single phase, 60 Hz, two-wire motor, with 10 - 30 foot long extra heavy duty (SO) electrical cord with ground. Pump shall be UL and CSA listed as an effluent pump.

2.02 AX-MAX ADVANTEX® TREATMENT SYSTEM

A. The treatment system shall be an Orenco Systems®, Inc. AdvanTex® AX-MAX facility. The facility shall be a complete, fully plumbed wastewater treatment system for receiving and processing septic tank effluent. The unit(s) shall be a modular packed bed media filter that incorporates the recirculation tank, media, lateral piping, pumps, ventilation plumbing, etc. The vessel housing the equipment shall be constructed of 4-inch insulated walls. The lateral piping network that recirculates water from the recirculation tank shall be mounted atop hanging textile media. The media shall be a hanging textile media having a surface area of greater than 2,000 sq.ft/cu.ft. The treatment unit should have a hydraulic design capacity of 25 gpd/sf based upon everyday Average Daily Flow and 50 gpd/sf based upon a Maximum Daily Flow (occurring once in a 7 day period).

B. Plant configuration and number of units will vary based upon daily flows, anticipated organic and nitrogen loading rates and expected discharge permit limits. Please consult with Orenco Systems, Inc. for a proposed configuration and sizing.

2.03 AX MAX VENTILATION SYSTEM

INDIVIDUAL UNIT FANS

An Orenco Systems®, Inc. ventilation system shall be provided in the AX-MAX Series Treatment Facility or approved equal. The fan shall be UL recognized, 0.8 Hp, 115/230VAC, 1.4A/0.7A, 3400 RPM, and provide up to 245 CFM at 0” H_2O. The exhaust from the ventilation fan shall be forced through an enclosure with an adequate amount of activated carbon to remove any odors for a period of over one (1) year.

2.04 SPLICE BOX CONDUIT SEALS AND SEALANTS

As part of the treatment package, all AX-Max units will include re-installed splice boxes and UL listed waterproof butt splice connectors. The use of a UL-approved conduit seal kit accessible above ground shall be required to prevent the passage of gases, vapors, or flames through the conduit to the control panel. An additional UL classified sealant shall be added to the splice box

coupling to prevent condensation accumulation in the splice box. The following UL approved sealants shall be used:

a. UL classified moisture-cure polyurethane quick drying foam or **ENGINEER**-approved equal with an R-5 rating for each inch of foam.

b. UL classified silicone sealant or **ENGINEER**-approved equal consisting of a neutral cure silicone, non-acetic, non-corrosive silicone able to withstand temperatures to 450° F.

2.05 CONTROLS

A. Controls and alarms shall be listed per UL 508. Panels shall be repairable in the field without the use of soldering irons or substantial disassembly.

B. An InGateway 601 series cellular modem, model IG601 shall be installed. Panel is required to allow real-time connectivity with the telemetry control panel and alarm communication. Phone dialers shall not be considered as an equivalent.

C. Panel shall be Orenco Systems®, Inc. TCOM™ control panel or engineer-approved equal, meeting the following:

1. Data Collection and Utilization: Logs data for system conditions and events such as daily flows, pump run time, pump cycles, and alarm conditions. Logs shall store data for at least a year.
2. Downloadable Logs: Download logs into a *.dif or ASCII format for simple conversion to common spreadsheet or word processor programs.
3. Multi-Level Password Security: Only qualified personnel can remotely access site.
4. Program Logic Rules: Simple “If … then” declarations.
5. Rules can be written based on several operands, including the following:
6. Input/output status
7. Point status
8. Date: mm/dd/yy format
9. Time of day: 24 hour clock
10. Timers
11. Historical data (allows for control optimization or detection of trends)
12. Schedule functions to control digital “Points” based on date or day of week/time.
13. Automatic daylight savings time adjustment.
14. Automatic call-out to pagers during alarm conditions when panel detects trends that could lead to system failure.

D. In addition, the unit shall have the capability of real-time direct connection to the panel via laptop serial port, to allow the operator real-time access to detailed logged data and the ability to change point values.

1. Standard Components

a. Motor-Start Contactor: 17 FLA, 1-2 hp, 60 Hz; 2.5 million cycles at FLA (10 million at 50% of FLA for 230VAC.

b. HOA 3- Way Toggle Switch: Single-pole switch, Hands (manual) Off, Auto ON. 20 amps, 1 hp.

c. Controls Circuit Breaker: 10 amps, OFF/ON switch. Single-pole 120 VAC. DIN rail mounting with thermal magnetic tripping characteristics.

d. Pump Circuit Breaker: 20 amps, OFF/ON switch. Single-pole for 120 VAC or double-pole for 230 VAC. DIN rail mounting with thermal magnetic tripping characteristics.

e. Audio Alarm: 80 dB at 24", warble-tone sound.

f. 120VAC Ground Fault Interrupter (GFI)

g. Current Sensor: 120 VAC with adjustable high & low alarm set points.

h. Visual Alarm: 7/8" diameter red lens, "push-to-silence." NEMA 4, 1-watt bulb, 115 VAC.

i. Panel Enclosure: NEMA 4, constructed of painted steel; hinges and latch are stainless steel. Conduit couplings provided.

j. Remote Telemetry Unit: ATRTU-Net; self powered 24 VDC at 10 mA max, 8 digital inputs, 8 analog inputs expandable to 16 with expansion board. On-board modem (9600 baud), Ethernet port (10 base T, RJ45jack) and Modbus port (R5422/485 terminals).

k. Touch Screen Display: interface module with 5.7 color touch screen, mounted in Panel Door.

l. Flow Meter – Siemens, electromagnetic flow meter model MAG 3100, with 5000/6000 series transmitter. In addition to logging daily flows, flow meter shall log flows on an hourly basis.

a. Pump Run Light: 7/8" green lens. NEMA 4, 1-watt bulb, 120 VAC.

b. Surge Arrestor: AG2401 120/230V, three 18" leads, rated for a maximum of 32,000amps, UL/CSA listed.

c. 3- Way (main, auto, off) manual transfer/disconnect switch

d. Effluent Alarm: 95db at 24", warble-tone sound.

2.06 CONTROL BUILDING

The control building shall be an Orenco Systems®, Inc. Fiberglass Shelter or engineered approved equal to house controls and chemical feeders. The shelter shall be a complete seamless, molded, one-piece enclosure constructed of an insulated foam-core wall monolithically poured. Wall thickness shall be no less then 4-inches thick with a minimum insulation value of R12. Shelter shall be capable of withstanding 160mph. The roof shall be capable of handling a 100psf live load. Manufacture will provide a 10-year limited warranty on workmanship.

2.07 INSTALLATION

All treatment, pumping system, and electrical components shall be installed in accordance with the **MANUFACTURE'S** recommendations, the engineer's plans, and all state and local regulations.

2.08 LOCATION

The pump control panel shall be mounted within a building nearest the tank and pump. The panel, when possible, should be mounted in the shade and protected from the weather. The panel should

be located at a convenient height (usually about five feet above the ground) and where it will be accessible for maintenance.

PART 3 - EXECUTION

3.01 PRECONSTRUCTION CONFERENCE

Before any work at the site is started, a conference attended by the **OWNER**, **CONTRACTOR**, **ENGINEER, MANUFACTURE, OPERATOR** and others as appropriate will be held to establish a working understanding among the parties as to the work involved for installing each component of the treatment system. At this conference, the **OWNER**, **CONTRACTOR**, **ENGINEER**, and **MANUFACTURE** shall designate, in writing, a specific individual to act as **INSPECTOR** for the installation of the treatment system. Any cost or fees associated with the services of the **INSPECTOR** or the **ENGINEER** during construction will be the responsibility of the **OWNER.**

3.02 INSTALLATION AND FILED TESTING TRAINING

The **MANUFACTURER** shall provide the services of a trained representative to instruct the installing **CONTRACTOR'S** crew and **INSPECTOR** regarding the proper installation and field testing of each component per the **MANUFACTURE'S** recommendations and requirements. The **MANUFACTURER** shall have a trained representative provide installation and field testing training services for a minimum of one (1) visit of a minimum of one (1) eight-hour day at the beginning of construction.

3.03 QUALITY CONTROL

A. To ensure quality control, the **INSPECTOR** shall inspect and certify that an initial installation of the AdvanTex® system is in compliance with the **MANUFACTURE'S** recommendations and requirements.

B. Upon completion of the inspection, the **INSPECTOR**, in coordination with the **ENGINEER**, shall perform or direct the **CONTRACTOR** to perform any required adjustments to the equipment and place into operation under the supervision of the **ENGINEER**. All equipment and materials required to perform the testing shall be the responsibility of the **CONTRACTOR.** A letter of completion shall be signed by the **INSPECTOR** and copies faxed, emailed, or mailed to the **ENGINEER** and **MANUFACTURE** within one (1) week of the AdvanTex® system being installed and prior to System Commissioning.

C. The **MANUFACTURER** shall provide the services of a trained representative for a minimum of one (1) visit of a minimum of one (1) eight-hour day for the purpose of quality control during construction.

3.04 SYSTEM COMMISSIONING

A. The **MANUFACTURER** shall provide the services of a trained representative for training the **OWNER'S** service provider, and inspecting the AdvanTex® installation. The inspection will include items covered from the installation training. Upon system commissioning, the **MANUFACTURER'S** trained representative shall provide the **ENGINEER** a written report of findings. The **ENGINEER** should then perform or direct the **CONTRACTOR** to perform any required adjustments to the equipment and place into operation. All equipment and materials required to perform additional testing shall be the responsibility of the **CONTRACTOR.** The **MANUFACTURER** shall submit to the **ENGINEER** and **OWNER**, a detailed start-up checklist, according to the manufacturers inspection and startup procedures.

B. The **MANUFACTURER** shall provide the services of a trained representative for a minimum of one (1) visit of a minimum of one (1) eight-hour day for the purpose of system commissioning.

PART 4 – OPERATION AND MAINTENANCE

4.01 OPERATION AND MAINTENANCE MANUALS

The **MANUFACTURER** shall provide five (5) operation and maintenance manuals, four (4) to be sent to the **OWNER**, and one (1) sent to the **ENGINEER.**

4.02 SPARE PARTS

The **MANUFACTURER** shall provide a spare nozzles, spare pump, and spare control panel parts.

4.03 OPERATION AND MAINTENANCE TOOLS

A. AX LATERAL BRUSH CLEANING KIT

MANUFACTURER shall provide a minimum of one (1) AX Lateral Brush Cleaning Kit. This kit shall include 90-inch lateral cleaning brush used to clean 1-1/4" diameter laterals and shall be Orenco Systems®, Inc., OM-AX-LAT BRUSH CLEANING KIT or **ENGINEER-**approved equal.

B. AX SHEET CLEANING WAND

MANUFACTURER shall provide a minimum of one AX sheet-cleaning wand. Wand shall be Orenco Systems®, Inc. model OM-AX-CLEANING WAND or **ENGINEER**-approved equal. Cleaning wand shall have the ability to connect to a standard garden hose, and fit in between AX sheets to spray off debris.

C. FIELD TEST KIT

MANUFACTURER shall provide a field test kit to monitor the following parameters:

a. pH
b. Alkalinity
c. Ammonia (NH_3-N)
d. Nitrate/Nitrite (NO_3-N / NO_2-N)
e. Dissolved Oxygen (DO)
f. Chlorides
g. Turbidity
h. Temperature

The field test kit shall include:

a. pH test strips (0-14 pH)
b. Alkalinity test strips (0-240 ppm)
c. Ammonia (NH3-N) test strips (0-6 ppm)
d. Nitrate/Nitrite (NO_3-N / NO_2-N) test strips (0-50 ppm)
e. Dissolved Oxygen (DO) kit (1-12 ppm)
f. Chloride titrators (30-600 ppm & 300-6000 ppm)
g. Turbidity kit (0-200 NTUs)
h. Thermometer (0-240° F)

APPENDIX A

e) AX-MAX INSTALLATION CHECKLIST

SYSTEM OWNER:_____ **DATE:** _____

SITE ADDRESS: _____

_____ **SYSTEM PROVIDER:** _____

CONTRACTOR: _____ **INSPECTOR:**_____

AS-BUILT SITE DIAGRAM

Please draw an as-built sketch of the site including approximate location of buildings, property boundaries, trees, fences, existing septic systems, existing wells, new septic tank, recirculation tanks, pump basins, AdvanTex® system, sewer piping, drainfield, etc. Include dimensions.

YES	*NO*	*PRE-INSTALLATION*	*DATE/INITIAL:*
_____	_____	Tank and AX-MAX location approved per engineer	
_____	_____	Panel location approved per engineer	
_____	_____	Electrical supply (# circuits/disconnect)	
_____	_____	AX-MAX equipment package reviewed and approved	
_____	_____	Contractor has reviewed AX-MAX Installation Manual (NIM-ATX-AX-3)	

YES	*NO*	*TANK INSTALL (per Manufacture)*	*DATE/INITIAL:*
_____	_____	Tank Warranty	

_____	_____	
_____	_____	Date manufacture specified
_____	_____	Factory leak test documentation
_____	_____	Inlet connection approved
_____	_____	Certificate of Origin
_____	_____	Inlet tee installed
_____	_____	Riser-to-Tank connections approved
_____	_____	Tank is level and properly bedded
_____	_____	Tank passes leak test/water tight test (tank filled 2" above tank/riser connection)

YES	NO	ACCESS RISERS	DATE/INITIAL:
_____	_____	Access risers installed per manufacture's instructions	
_____	_____	Splice Box location acceptable and installed per manufacture's instructions	
_____	_____	Discharge grommet holes installed properly and oriented per engineer's plans (if applicable)	

YES	NO	SITE PREP-INGROUND INSTALLATION	DATE/INITIAL:
_____	_____	Verify elevations and orientations per engineer's plans can be achieved	
_____	_____	If gravity from septic tank to AX-MAX, ensure 1/8-inch slope between vessels	
_____	_____	Outline and mark excavation site, excavate to depth shown on plans	
_____	_____	Bottom of excavation is free of debris, rocks, or sharp objects	
_____	_____	Proper bedding material laid and at least 4-inch thick by 7-1/2-feet wide and encompasses the length of the AX-MAX	
_____	_____	Bedding material leveled and compacted	

YES	NO	SET AX-MAX UNIT	DATE/INITIAL:
_____	_____	Installer has reviewed offloading instructions	
_____	_____	AX-MAX lid is above grade per engineer's plans	
_____	_____	AX-MAX units have proper spacing per engineer's plans	

YES	NO	ANTIBUOYANCY MEASURES	DATE/INITIAL:
_____	_____	Manufacture supplied anti-buoyancy flanges attached	
_____	_____	Concrete forms constructed per manufacture's instructions	
_____	_____	Rebar placed per manufacture's instructions	
_____	_____	Concrete poured into forms and set prior to backfilling	
_____	_____		

YES	NO	PARTIAL BACKFILL/WATER TEST	DATE/INITIAL:
_____	_____	Proper backfill used and free of debris, rocks, or sharp objects	
_____	_____	AX-MAX backfilled in 12-inch lifts and compacted with mechanical compactor	
_____	_____	AX-MAX watertight tested per manufacture's instructions	

YES	NO	PUMPS/PLUMBING/VENTILATION	DATE/INITIAL:
_____	_____	All pumps and connections identified	
_____	_____	All pumps installed and connected to discharge assemblies, packing material removed	
_____	_____	All fittings, transport and plumbing lines installed and sized per engineer's plans	
_____	_____	Any exposed pipe painted with UV resistant paint	

YES	NO	CONTROL PANEL	DATE/INITIAL:
_____	_____	Incoming power to panel installed	
_____	_____	Phone line or high speed internet to the modem is installed	
_____	_____	Wiring from pumps and floats installed per manufacture's schematic	
_____	_____	Conduit seal installed before control panel for all conduits	
_____	_____	Control panel installed under awning or in control building	
_____	_____	Control panel documentation and schematics left in control panel	

YES	NO	BACKFILL INSTALLATION	DATE/INITIAL:
_____	_____	Backfill complete using 12-inch lifts and mechanically compacted	
_____	_____	Backfill brought to final grade per engineer's plans	

YES	NO	PREPARE FOR OPERATION	DATE/INITIAL:
_____	_____	AX-MAX filled half way for pump tests	
_____	_____	Nozzles are facing up and lateral flush valves are open	
_____	_____	Pumps turned on and laterals flushed of all debris	
_____	_____	Nozzles pointed down and lateral flush valves closed after flushing	
_____	_____	Manifold pressures adjusted to 3-3.5 psi	
_____	_____	All nozzles have a uniform spray and reach edge of splash guards	
_____	_____	Floats checked for proper operation by simulating a raising and lowering of the liquid level	
_____	_____	Fan is operational and there is air flow at the inlet and exhaust	

YES	NO	PREPARE FOR START UP	DATE/INITIAL:

_____	_____	All plumbing connections have been completed and tested
_____	_____	All electrical connections have been completed and tested
_____	_____	All tanks have successfully been tested for watertightness
_____	_____	Phone or high speed internet line has been connected and is operational
_____	_____	Floats work as intended by simulating a rising and lowering of the liquid level
_____	_____	There is enough water in all tanks to perform pump and float operations
_____	_____	All exposed PVC is either protected by UV paint or insulation

Inspector: _____ ***Date:*** _____

END OF SECTION

Technical Data Sheet

Orenco® TCOM Remote Telemetry Board

Orenco Systems® Incorporated
800-348-9843

Applications

Orenco's line of affordable TCOM remote telemetry units give facility managers, operators, and maintenance providers the ability to remotely monitor and control the performance of mechanical equipment in real time. Ideal for:

- Wastewater Collection and Treatment
- Water Systems
- Environmental Monitoring
- Industrial Processes

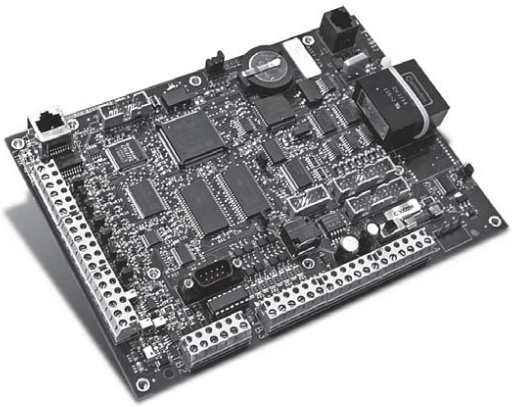

Orenco® TeleComm™ (TCOM) ATRTU-NET remote telemetry board

Features/Unique Specifications

To specify this panel for your installation, require the following:

- Automatic call-out to e-mail capable devices during alarm conditions or when panel detects trends that could lead to system failure
- Ability to maintain logs for system conditions and events, such as Motor Run Time, Motor Cycles, and Alarm Conditions
- Downloadable logs into a *.dif or ASCII format for simple conversion to common spreadsheet or word processor programs
- No proprietary computer software needed for remote monitoring and control. VT100 protocol allows remote access and control from any computer modem (Mac or PC) with a simple communications program (e.g. Windows® HyperTerminal).
- Bluetooth® adapter available.
- Multi-level password security to ensure that only qualified personnel can remotely access site
- Simple interface using status, reference, and control parameters (Points). Points are viewable/editable by the operator. The following "point" types are supported:
  - Digital: on or off condition
  - Analog: numeric range (± 20,000,000)
  - Date: mm/dd/yy format
  - Time: 24 hour clock
  - Label: Text (7 character max)
- Program logic (rules) consists of simple conditional "If… Then" declarations. Rules can be written based on several operands, including the following:
  - Input / Output status
  - Point status
  - Date: mm/dd/yy format
  - Time of day: 24 hour clock
  - Timers
  - Historical data (allows for control optimization or detection of trends)
- Schedule Functions to control digital "Points" based on date or day of week / time
- Automatic daylight savings time adjustment
- Optional graphical interface software to view system status and permit interactive system control
- Ability to upload new programming remotely
- Ability to upload firmware updates remotely

TCOM Remote Telemetry Board (continued)

Model: ATRTU-NET

Hardware Specifications

Physical Size

- 5.75" x 8.0"

Terminations

- Removable terminal blocks with screw compression terminals
- Accepts 16 to 22 AWG solid or stranded wires

Digital Input Features

- Eight inputs
- Discrete or pulse (25 pulse/sec maximum)
- Self-powered: 24 VDC at 10 mA maximum
- Yellow LED input indicators
- Optically isolated
- Expandable to 16 inputs with expansion board

Analog Input Features

- Eight inputs
- Expandable to 16 inputs with expansion board
- 0-5 VDC input signal, or 4-20 mA input with jumper)
- Linear or 10k ohm thermistor scaling
- 12-bit analog-to-digital resolution

Digital Output Features

- Eight outputs
- Expandable to 16 outputs with expansion board

Analog Output Features

- Two outputs
- 4-20 mA output signal
- 10-bit digital-to-analog resolution

Communication Ports

- RS-232 port – 9 pin (Bluetooth adapter available)
- On-board modem: 33.6-k baud (RJ11 phone jack)
- Ethernet port (10 base T, RJ45 jack)
- Serial modbus port (RS422/485 terminals)

Sensor/External Relay Power Supply

- 5 VDC, 30 mA maximum
- 24 VDC, 350 mA maximum

Power Requirements

- 24 VDC, 1.2 A

Environment

- 32° F to 122° F (0° C to 50° C)
- 5% to 95% RH, non-condensing

Firmware Specifications

Safety Features

- Non-volatile memory backup of program
- Lithium battery backup of data and program settings (1-year storage without power)
- Hardware Watchdog Timer to restart system in the event of a program corruption
- Battery backup to allow continued monitoring and alarm functions during power outage (optional)

Logs

- Activity log (a minimum of 2048 defined digital events)
- Alarm log (up to 240 board-level events)
- Custom designed user logs for recording flow, level, alarms, etc. (up to 32 individual logs, with a total of 65,472 logged data points)
- Maintenance log (up to 64 entries of 60 characters)

Control Parameters (Points)

- 672 available control parameters

Program Logic (Rules)

- 800 available rules

Schedules

- 64 available events (time and day or date-based) events

Alarm Callout Capability (Mailboxes)

- 16 destinations (mailboxes) available for alarm event notifications
- E-mail capable (POP3/SMTP e-mail server required)

Networking Protocols

- Ethernet
  - a. Modbus TCP-capable (permits peer-to-peer communications, up to 16 peers)
  - b. HTTP Web server-capable
  - c. TELNET text terminal compatible
- Serial modbus (permits our controller to act as master or slave)
  - a. As "master," modbus permits connection to off-the-shelf, non-proprietary devices that support modbus protocols. Can control and monitor up to 32 clients.
  - b. As "slave," modbus permits connection to and communication with modbus servers.

Appendix D: RATES AND SERVICE FEES-THE CROSSINGS

Effective June 1, 2015

Purpose:

The wastewater rates and services charges contained in this special section are specific to The Crossings, a residential development located in Section D.1. All water rates and services charges are listed in Section G of the Crystal Clear SUD Rules and Regulations. These wastewater rates and services charges shall take effect upon delivery of service to each residential unit.

1. Class of User:

   All users in The Crossings of the District's wastewater services are identified as residential users and the rates and charges herein are for wastewater service only. For Water Service Rates and Charges, refer to Section G of the Rules and Regulations.

2. Deposit(s):

   At the time of application of service is approved, the applicant shall pay a Deposit for both water and wastewater to be held by the District, without interest, until settlement of customer's final bill. The Deposit shall be used to offset unpaid charges or bills.

   a. Residential applicants only

   b. The Deposit for residential wastewater service is $50 (See Section G for Water Service Deposit).

3. Easement Fee:

   When the District determines that private way utility easements and/or easements for facility sites are necessary to provide service to an applicant, the applicant shall be required to make a good faith effort to secure such easements on behalf of the District or pay all costs incurred by the District to validate, clear and obtain such easements, including but not limited to legal fees and court costs, in addition to tap fees and inspections fees otherwise required pursuant to the provisions of the Rules and Regulations [See Sections E.2(c)(2) and F.7(a)].

4. Septic Tank Effluent Pumping (STEP) Unit Installation:

   a. Unless the developer has already completed the installation of the STEP Unit per the District's and the TCEQ's specifications and requirements and conveyed it to the District, the District shall charge a connection fee for Wastewater Capacity Fee of $500 for standard STEP Unit service connection plus the actual costs for all labor, materials for construction, installation of the STEP Unit.

   b. Additionally, the District will charge the following fees associated with the installation and connection by either party of the STEP Unit to the District's low pressure force main. These fees consist of an inspection fee of $100 for each stage of the installation:

      (1) At the time of excavation and readying of the site for installation with all of the proper sizing and bedding (See CCR's);

      (2) placement of the certified STEP Unit in the excavated site to ensure proper fit and fill material is used;

(3) completion of the installation to ensure proper dressing and completion of the installation:

(4) and, at the time of connection of the STEP Unit to the low pressure force main to ensure that it meets all TCEQ requirement.

5. Wastewater Service Capacity Reservation Fee:

   The District shall charge a Wastewater Service Capacity Reservation Fee of $25 per month to either the developer or property owner (where the owner has not yet completed construction of the residence prior to being connected to the District's collection system).

6. Monthly Base Wastewater Service Fee:

   The Monthly base Wastewater Service Fee for a residence who's STEP Unit has been installed and connected, including all applicable approved inspections, shall be $33.64. The Monthly Base Fee will be evaluated yearly and may be adjusted to ensure that all costs covering the Operations and Maintenance of the District's Wastewater System are met.

7. Monthly Wastewater Usage Fee:

   The Monthly Wastewater Usage Fee for a residential unit covers the costs for processing the effluent created by the specific unit. The cost is determined utilizing the monthly amount of water used by the residential unit. If the water usage amount is greater than 5,000 gallons per month, the wastewater usage fee is calculated at 0.60 times $4.87/1000 gallons. If the water usage amount is less than 5.000 gallons per month, the usage fee is calculated at 0.60 times $4.43/1000 gallons. Examples:

   a. Residence with monthly water usage of 7,500 gallons X 0.60 = 4,500 gallons X $4.87 = $21.915 Wastewater Usage Fee

   b. Residence with monthly water usage of 3,000 gallons X 0.60 = 1800 gallons X $4.43 = $7.974 Wastewater Usage Fee

8. Maintenance and Repair of Wastewater Treatment and Collection System:

   The District is responsible for all maintenance and operation of the Wastewater Treatment and Collection System upon completion of the first residential unit in the development and after all of the facilities has been properly inspected by and conveyed to the District by the developer. The individual residential property owner has a responsibility to use the wastewater facilities in a proper manner, *i.e.*,

   a. No poisonous, flammable or hazardous material(s) shall be inserted into or sent into the system (STEP Unit). Should this occur, the owner shall be responsible for all damage and repair required to the system, regardless of where it occurs. Testing will be done should an event warrant it to determine the cause, and proper action taken by the District, including disconnection of both water and wastewater service, should circumstances prove that these materials are present in the system/STEP Unit.

b. Under normal household conditions the buildup of sludge and grease in the STEP Unit will not create a problem and is included as part of the District's normal maintenance procedures which call for a STEP Unit Clean Up (sludge and grease removal) on a 10 year cycle. However, if abnormal buildup of sludge or grease is noted in the STEP Unit that may require a STEP Unit Clean Up in less than the 10 year cycle, the account will be notified and charged, at cost for removal of excess sludge and grease plus a District handling fee of $100, for maintenance procedure. Note: routine inspection, including the noting of the buildup of sludge and grease occurs every three (3) months at each STEP Unit. Early detection of abnormal buildup will be noted to the individual household so that remedial steps can be taken to avoid any early STEP Unit Clean Up; however, if the abnormal buildup continues, then the foregoing action will occur which may include in the case of excessive buildup of grease, the installation of a grease trap at the property owner's expense.

c. The STEP Unit is connected to a monitoring and alarm unit mounted close-by. This monitoring and alarming unit measures and detects any problems associated with the operation of the STEP Unit and should an event occur that warrants attention, the light will flash and the alarm will continue to flash and sound on the monitoring and alarming unit until the unit reset has been by the District's service technicians. Anyone noticing the flashing of the light and the alarm sounding is advised to call the emergency number located on the monitoring and alarm box/unit.